From Policy to Practice: Digging Deeper into the Board of Supervisors Oversight of Planning and Building Services

2025-2026 Mendocino County Civil Grand Jury

June 24, 2026

From Policy to Practice: Digging Deeper into the Board of Supervisors Oversight of Planning and Building Services

Contents

Summary 1

Glossary 2

Background 4

Methodology 5

Discussion 6

- **1. Direction and Standards** 6
- **2. PBS Policies and Procedures Overview** 7
- **3. PRC § 4290 and Title 14** 9
- **4.Limited Density Rural Dwelling** 12
- **5.Accountability** 14

Conclusion – The cracks are getting wider and deeper 15

Findings 15

Recommendations 16

Requests for Responses 17

Appendices

- **Appendix A**
- **Appendix B**

Bibliography

Exhibits

- **Index**

Summary

On June 6, 2025, the Mendocino County Civil Grand Jury published a report titled *Planning and Building Department Structural Issues: Exposing the Cracks* (GJ25 Report). The report identified deficiencies within Planning and Building Services (PBS) in the areas of formalized policies and procedures, application of state laws and county ordinances, and employee training.

In its August 29, 2025, response, the Board of Supervisors (BOS) rejected all recommendations except R7[1], determining them to be "not warranted and/or not deemed reasonable."

This response from the BOS prompted a follow-up investigation by the Grand Jury. The results of that follow-up investigation are set forth in this report: "*From Policy to Practice: Digging Deeper into the Board of Supervisors Oversight of Planning and Building Services*." The investigation examined the County's lack of formalized policies and procedures, specifically within the Building Division and concerning Public Resources Code section 4290/Title 14 Fire Safe Regulations (PRC 4290), and the Limited Density Rural Dwelling (Class K). Review of records obtained through Public Records Act requests revealed a disconnect between the BOS, the County Chief Executive Officer (CEO), and PBS management. The lack of clear direction and oversight by the BOS is contrary to sound administrative practices and presents unnecessary risks to public safety and compromises public trust in county governance.

Importantly, the BOS *Mission Statement* (See Appendix A) commits the BOS to providing a responsive and responsible government that meets the public safety and community needs of Mendocino County residents. The BOS *Principles of Office* (See Appendix B) requires supervisors to devote adequate diligence to their duties, base decisions on all available facts, and establish policies by which the County is administered.

PBS continues to lack the direction necessary to develop, implement, and enforce effective policies and procedures. This absence of oversight undermines public safety, which must remain the highest priority of the BOS. The BOS has not provided clear, consistent guidance to ensure compliance with state law and county ordinances, nor has it ensured the creation of current, comprehensive policies.

---

[1] R7. The Grand Jury recommends the Board of Supervisors instruct the Chief Executive Officer to implement new software applications for tracking all processes in Planning and Building Services, including but not limited to permits, inspections, fees and Code Enforcement complaints, by April 1, 2026. Mendocino County Board of Supervisors, Ukiah, CA, 2025. Response to Findings, Mendocino County Civil Grand Jury Report. Planning and Building - Structural Issues: Exposing the Cracks.

For residents, the absence of clear policies and procedures means public safety decisions may be inconsistent, uninformed, or improperly applied. When information is not verified and standards are unclear, residents face increased risk, reduced accountability, and uneven enforcement of the law. Ultimately, this lack of structure undermines confidence in local government and compromises the County's ability to protect its communities fairly, lawfully, and effectively.

Glossary

BOS**:** The Office of the Board of Supervisors is the primary governing body within Mendocino County, combining legislative, executive, and quasi-judicial powers through elected district representation.

Bulletin**:** A bulletin is a short, often urgent communication used to share updates, alerts, or reminders. It is typically temporary or situational. The purpose is to inform staff quickly about changes, events, or issues.

CAL FIRE**:** California Department of Forestry and Fire Protection

CBC**:** California Building Code, Title 24, California Code of Regulations

California Public Resources Code §4290**:** This State law applies to the perimeters and access to all residential, commercial, and industrial building construction within the State Responsibility Area (SRA) approved after January 1, 1991, and located within those lands classified and designated as Very High Fire Hazard Severity Zones (VHFHSZ) as of July 1, 2021. The intent of this law includes, but not limited to:

- Road standards for fire equipment access;
- Standards for signs identifying streets, roads, and buildings;
- Minimum private water supply reserves for emergency fire use; and
- Fuel breaks and greenbelts.

CED**:** Code Enforcement Division, Mendocino County Planning and Building Services Department.

CEO**:** Mendocino County Chief Executive Office.

Class K (Limited Density Rural Dwelling)**:** This permit is a deviation of the California Building Code and was adopted in 1981 by Mendocino County with the intent to provide the absolute minimum safety requirements for the protection of life, welfare and property of habitable dwellings. This alternative permit was designed to allow homeowners to use unconventional means and materials, rather than relying on licensed contractors to build their homes using conventional and often expensive methods.

Comprehensive: including all details, facts, and information that may be relevant.

eTRAKit**:** Web-based property data, project data, and permit tracking system used by Mendocino County Planning and Building Services.

GJ25 Report**:** 2025 Grand Jury Report, *Planning and Building Department Structural Issues: Exposing the Cracks.*

HSC**:** California Health and Safety Code: A comprehensive set of statutes regulating public health, environmental safety, housing, building standards, and controlled substances.

MCC**:** Mendocino County Code of Ordinances**.**

Memorandum**:** Formal internal communication used to convey decisions, requests, or information. It is more detailed than a bulletin, although less formal than a policy. The purpose is to communicate internally about operational matters and targeted towards specific individuals or departments.

PRC**:** California Public Resources Code

PBS**:** Mendocino County Planning and Building Services Department

Policy**:** A formal statement of principles or rules that guide decision-making and behavior within an organization. The purpose is to establish expectations and standards and apply broadly across departments or the entire organization.

PRA**:** Public Records Act (Government Code sections 7920 – 7931); provides public access to information by state and local agencies to ensure government accountability

Procedure**:** Outlines the steps or methods needed to implement a policy. The purpose is detailed instructions for implementing policies and creating consistency throughout a department or a division.

SRA**:** State Responsibility Area; Lands designated in California where the California Board of Forestry and CAL FIRE hold primary financial responsibility for wildfire prevention and suppression.

Style Guide**:** Standards for the writing, formatting, and design of documents within a department or organization. It provides consistency and ensures clarity of the documents.

Title 14**:** California Code of Regulations Title 14. Natural Resources, Division 1.5. Department of Forestry and Fire Protection, Chapter 7. Fire Protection, Subchapter 2. State Minimum Fire Safe Regulations § 1270.00 et seq. (The State procedure for implementing PRC §4290.)

VHFHSZ**:** Very High Fire Hazard Severity Zone; Classification of areas in California where a very high fire hazard is present based on fuels, topography, climate, and other relevant factors that support dangerous fire behavior.

Workflow Diagram (Workflow)**:** Provides a graphic overview of a business process. A workflow diagram is often supported within written policy and procedures.

Background

On June 24, 2025, the BOS appointed an ad hoc committee of two supervisors to prepare a response to the GJ25 Report. The committee submitted its formal response to the Grand Jury on September 9, 2025. That response did not adequately address the substance or intent of the Grand Jury's findings and recommendations.

Before the response was adopted, an audio recording of the September 9, 2025, public meeting revealed BOS members acknowledged limitations in the scope of their review of the GJ25 Report and the lack of complete information from the BOS ad hoc committee's written response. The BOS requested clarification from County Counsel regarding parameters for discussing the recommendations[2]. The recording also showed that none of the attending supervisors verified the accuracy of the information or statements contained in the response prior to its formal approval. This type of action appears inconsistent with the BOS *Mission Statement* and the *Principles of Office.*

The BOS formal response to the 2024-2025 Grand Jury Report, was dated August 25, 2025, and signed on September 9, 2025. The current Grand Jury found that response did not meet the requirements of California Penal Code section 933.05 (b)(4) particularly for its failure to provide the required explanation for rejecting Recommendations 1, 2, 3, 4, 5, 6, 8, 9, and 10. For that reason, a follow up investigation was necessary.

The issues identified in the GJ25 Report are still present in PBS and must be addressed. Some of the issues included in the GJ25 Report were the lack of accountability, the inability and/or unwillingness to enforce State law and County ordinances, and inconsistency in the use of discretion when interpreting and applying the law.

Since 2016, the Grand Jury has reported to the BOS regarding PBS and the Code Enforcement Division (CED) in three separate reports (2015-2016, 2016-2017, and 2024-2025), which has resulted in little, if any, change in how PBS serves the residents of the County. (NOTE: the Cannabis Division was not included in the three reports.)

During the current investigation, the Grand Jury conducted interviews with responsible personnel, including the BOS, CEO, Directors, County staff, and State Officials. The investigation revealed two shining stars within PBS. First, the staff that are responsible for

---

[2] Mendocino County Board of Supervisors, Regular meeting video, "Agenda item 4e. Grand Jury Report Response," Recorded September 9, 2025, Granicus, See comments at 1:34:48, 1:48:50, and 2:06:49, https://mendocino.granicus.com player/clip /455?meta_id=644569

conducting the daily operations for the County are dedicated, hardworking individuals that desire a positive outcome for the public. The second is that while the Cannabis Division was not included in the prior reports, this Grand Jury found that the clear policies, procedures and expectations for personnel that have been created for this division are the standard bearer for what should be expected from the entire department and divisions.

Outside of the Cannabis Division, there is still a lack of comprehensive policies and procedures governing the remaining divisions within PBS. In most divisions, policies and procedures, when they exist, are unclear and incomplete. They are a mix of bulletins, memorandums, workflows, and emails. The investigation revealed that the last comprehensive internal review of PBS policies and procedures was conducted by the former PBS Director in 2015. The success of any department or division directly correlates with consistent application of detailed and complete policies and procedures. Consistent application of State law, building codes, and County ordinances relies on comprehensive policies and procedures to be in place and followed.

Methodology

When the Grand Jury receives a complaint or a response to a report, it is presented in a Plenary session where it is confidentially discussed. A vote is taken to reject, table, or investigate the complaint or response. If rejected, no other action is taken. If tabled, the item may be considered in the following year by a new Grand Jury. Upon review of the BOS' August 25, 2025, response to the GJ25 Report, the Grand Jury determined that an investigation into the BOS' basis and justification for the response was necessary.

The 2025-2026 Grand Jury's investigation included the 20 gigabytes of documentation that was obtained through PRA requests and additional direct requests for documents from department heads, managers, PBS staff, and the BOS. The Grand Jury also utilized the County-based *eTRAKit*, *Zoning Web Map*, and *Tax Search by Parcel Number* data systems to verify information. The Grand Jury used *Zillow* and *Airbnb* websites for additional property information and satellite imagery from *Google Earth Pro* to obtain information dating back to 1985.

Beginning September 18, 2025, the Grand Jury began interviewing relevant Mendocino County department heads, managers, supervisors, and staff. In addition to interviewing County employees, the Grand Jury interviewed State officials and the BOS.

Over the course of the investigation, the Grand Jury reviewed the following websites and published documents.

- California Code of Regulations, Title 24
- California Code of Regulations, Title 25, Chapter 1, Subchapter 1, Article 8

- California Department of Housing and Community Development website
- California Health and Safety Code sections 17958.12, 17958.2
- Mendocino County BOS Agendas and Minutes
- Mendocino County CEO Reports
- Mendocino County Class Specification Bulletins (job descriptions)
- Mendocino County Code, Chapter 18.23, Ordinance No. 4404 and Ordinance No. 4526
- Mendocino County General Plan, Chapters 2, 3, and 5
- Mendocino County Grand Jury Reports 2016-2017, 2020-2021 and 2024-2025
- Mendocino County PBS Metrics
- Mendocino County Strategic Plan 2022-2027
- PRC section 4290 and related sections of Title 14

Discussion

The primary purpose of the investigation was to understand the BOS's rejection of the prior Grand Jury report and recommendations. This subsequent investigation brought into more focus how and why there are significant gaps in the few formal policies and procedures that PBS has in place.

The Grand Jury focused on five elements of discussion after reviewing all relevant information and data provided.

1. Direction and Standards

One of the Grand Jury's objectives during the investigation was to determine who is responsible for ensuring policies and procedures are in place within a department. The Committee interviewed senior management personnel with a focus on the following areas:

- Source of the authority to implement County policy and procedures to execute State law;
- Necessity for policies and procedures;
- Responsibility for ensuring policies and procedures is in place;
- Lack of comprehensive policies and procedures at PBS;
- Lack of standards describing the expectations of how policies and procedures are written.

The Grand Jury determined that the BOS is the entity responsible for the implementation of State law and how it applies to County government. The BOS is also responsible for ensuring that all departments within Mendocino County have comprehensive written policies and procedures.

The absence of comprehensive written policies and procedures in Mendocino County government has emerged in other areas. For example, the California State Audit 2025-049 Mendocino County report, released on December 18, 2025, found that the Assessor-Clerk-Recorder's Office and Auditor-Controller-Treasurer-Tax Collector do not have comprehensive written policies and procedures and that those offices operated on individual employees' institutional knowledge.

The Grand Jury reports "*Mendocino Coast Health Care District Sick, but Returning to Health*," dated June 12, 2024, and "*Planning and Building Department Structural Issues: Exposing the Cracks*," dated June 6, 2025, found these agencies lacked comprehensive policies and procedures; and daily operations were based on individual employees' institutional knowledge.

During the review of the PRA documentation from the BOS, CEO, and PBS, the Grand Jury could not find any formal written direction from the BOS or the CEO to create policies and procedures for PBS. This omission includes an absence of accepted standards for writing, reviewing, updating policies, procedures, and record revision guidelines for PBS.

2. PBS Policies and Procedures Overview

The lack of comprehensive policies and procedures has been an unresolved problem in PBS for over a decade. The Grand Jury reviewed all PBS policies, procedures, memorandums, bulletins, meeting agendas, meeting notes, workflows, and emails that were provided by the BOS and through PRA requests. After a thorough review of the Building Division's documents the Grand Jury found that Recommendations 5 and 6 of the GJ25 Report are still valid:

> R5. The Grand Jury recommends the Board of Supervisors give direction to the Chief Executive Officer to have a working draft of Policies and Procedures for all divisions within Planning and Building Services. The guidelines should be comprehensive, standardized, and easily accessible to all staff members to ensure that the processes are consistently followed and comply with regulatory requirements, by January 1, 2026.
>
> R6. The Grand Jury recommends that the Board of Supervisors give direction to the Chief Executive Officer to instruct Planning and Building Services to have a final version of Policy and Procedures for all divisions, by April 1, 2026.

A spreadsheet (See Exhibit 1) was developed by the Grand Jury that lists all Building Divisions' policies, procedures, memorandums, and bulletins, showing the document number, title, revision date, description, Class K, PRC section 4290/Title 14, and any duplications. The Grand Jury found the following as of January 1, 2026.

Policies:

- No document revision log
- Thirty-eight numbered policies (Numbered 1-46)
- Based on the numeric system used, there are eight missing/non-existent policies
- The last comprehensive revision was in 2015
- Only one policy referenced Class K
- Only one policy referenced PRC section 4290/Title 14
- Four duplicate policies
- Most of the titled policies are written as procedures (see Glossary)
- No style guidelines (see Glossary)

Procedures:

- No document revision log
- Four numbered procedures
- Two unnumbered procedures
- The last comprehensive revision was in 2023
- No Class K procedures
- No PRC section 4290/Title 14 procedures
- No style guidelines (see Glossary)

Bulletins:

- No document revision log
- Fourteen numbered bulletins (Numbered 1-17)
- Based on the numeric system used, there are three missing/non-existent bulletins
- The last comprehensive revision was in 1993 (most recent individual bulletin revision was in 2011)
- No Class K bulletins
- Only one bulletin referenced PRC section 4290/Title 14
- One bulletin that contradicts two different policies
- No style guidelines (see Glossary)

Memorandums:

- No document revision log
- Fourteen numbered memorandums (numbered 1-15)
- Based on the numeric system used, there is one missing/non-existent memorandum
- The last comprehensive revision was in 2020 (most recent individual memorandum was in 2025)
- No Class K memorandum
- No PRC section 4290/Title 14 memorandum

- One memorandum that references policies and procedures that do not exist
- One memorandum that does not follow criteria published on the website
- No style guidelines (see Glossary)

Workflow Diagram:

- No document revision log
- Three internal workflows (dated August 12-22, 2025)
- Two external workflows (dated April 17, 2025)
- All workflows are labeled as procedures without a document number
- No supporting policies or procedures for workflows
- No Class K workflow
- No workflows detailing unpermitted and illegal construction
- No PRC section 4290/Title 14 workflows
- No style guidelines (see Glossary)
- The Building Division workflows are all dated after the 2024-25 Grand Jury investigation began

It is the responsibility of the BOS to give clear, concise directions to update, create, and ensure that PBS' current practices are in line with State law and County ordinances in the form of written policies and procedures. The issues identified in the review of policies, procedures, bulletins, and memoranda are evidence of a failure to provide that assurance.

3. PRC §4290 and Title 14

In 1991, the State of California implemented Public Resource Code section 4290, and relevant sections in Title 14 of the California Code of Regulations, to create a safer environment for First Responders and the public living in the (SRA). These standards are a minimum requirement for all residential and commercial structures built after 1991 (See Glossary).

Public safety is identified as a BOS priority in its *Mission Statement*. However, the County has not adopted comprehensive policies, procedures, memoranda, bulletins, or workflows establishing how PRC section 4290/Title 14 Fire Safe Regulations are to be implemented in Mendocino County. Apart from Building Policy 05 and Building Bulletin #5. These provisions reference requirements of PRC section 4290 only with respect to bridges and cargo containers (See Exhibits 2 and 3). No County documents were identified that address broader application of these legal requirements.

The BOS response dated August 25, 2025, cited Attachments A and B as justification for current PBS practices when applying PRC section 4290 and Title 14. These attachments consist of excerpts from CAL FIRE Procedure Manual 9000, which provides internal

guidance to State employees and does not constitute County policy (See Exhibit 4). The materials do not grant local jurisdictions exemptions from statutory requirements and instead reference unspecified "county requirements."

At the time of this report, the Grand Jury was not provided with documentation or an explanation as to what those county requirements are. In the absence of adopted County policy or documented direction from the BOS or CEO, PBS independently interpreted and applied PRC section 4290 when approving permits for post 1991 illegally constructed residential and commercial structures located within SRA and VHFHSZ.

The Grand Jury reviewed all policies, procedures, memorandums, bulletins, meeting agendas, meeting notes, and legislation texts provided by the BOS and PBS, and the only written documentation referencing PRC section 4290/Title 14 from the County is Building Policy 05, Building Bulletin #5, one meeting agenda, one email, and a County Legislation Text written by a former PBS Director. Currently, there is no formal written policy, memorandum, bulletin, or workflow that outlines the process for PBS staff to ensure full compliance with the requirements of PRC section 4290/Title 14.

The current practice of PBS approving building permits for illegally constructed, pre-existing homes (post 1991) without compliance with PRC section 4290/Title 14, is based on a combination of two factors:

1. CAL FIRE 9000 Fire Prevention Manual states, "*The Mendocino Unit will not review Fire Safe Regulation applications for any pre-existing, unpermitted structures.*"
2. Building Division institutional knowledge and verbal internal communications are based only on staff interpretations of the rules and prior practices and lacks the BOS interpretation and direction.

The California Code of Regulations Title 14, Natural Resources Division 1.5, Department of Forestry and Fire Protection Chapter 7, Fire Protection Subchapter 2, State Minimum Fire Safe Regulations (See Exhibit 5), provides in pertinent part:

> *Article 1. Administration*
> *§ 1270.01. Definitions – "(s) Local Jurisdiction: Any county, city/county agency or department, or any locally authorized district that approves or has the authority to regulate Development."*
>
> *§ 1270.02. Purpose – "(a) Subchapter 2 has been prepared and adopted for the purpose of establishing state minimum Wildfire protection standards in conjunction with Building, construction, and Development in the State Responsibility Area (SRA)*

and, after July 1, 2021, the Very High Fire Hazard Severity Zones, as defined in Government Code § 51177(i) (VHFHSZ)."

§ 1270.04. Provisions for Application of these Regulations – "This Subchapter shall be applied as follows:

(a) the Local Jurisdictions shall provide the Director of the California Department of Forestry and Fire Protection (CAL FIRE) or their designee with notice of applications for Building permits, tentative parcel maps, tentative maps, and installation or use permits for construction or Development within the SRA, or if after July, 1 2021, the VHFHSZ.

(b) the Director or their designee may review and make fire protection recommendations on applicable construction or development permits or maps provided by the Local Jurisdiction.

(c) the Local Jurisdiction shall ensure that the applicable sections of this Subchapter become a condition of approval of any applicable construction or Development permit or map."

§ 1270.05. Local Regulations –

(a) Subchapter 2 shall serve as the minimum Wildfire protection standards applied in SRA and VHFHSZ. However, Subchapter 2 does not supersede local regulations which equal or exceed the standards of this Subchapter.

(b) A local regulation equals or exceeds a minimum standard of this Subchapter only if, at a minimum, the local regulation also fully complies with the corresponding minimum standard in this Subchapter.

(c) A Local Jurisdiction shall not apply exemptions to Subchapter 2 that are not enumerated in Subchapter 2. Exceptions requested and approved in conformance with § 1270.07 (Exceptions to Standards) may be granted on a case-by-case basis.

(d) Notwithstanding a local regulation that equals or exceeds the State Minimum Fire Safe Regulations, Building construction shall comply with the State Minimum Fire Safe Regulations.

The above sections of Title 14 clearly define what responsibilities are placed on local jurisdiction in the County. There is no blanket exemption in PRC section 4290/Title14 for local jurisdictions including the BOS and PBS.

Building Policy 05 and Building Bulletin #5 reference implementation of PRC section 4290/Title 14 by requiring adherence to State code when issuing bridge permits and building permits for shipping or cargo containers. PBS' acknowledgment of this statutory obligation for bridges and containers conflicts with the County's unwritten practice of exempting illegally constructed, post 1991 residential dwellings from PRC section 4290/Title 14 compliance. This type of selective enforcement fosters perceptions of favoritism, invites bias, and perpetuates the County's failure to ensure implementation of minimum wildfire protection standards.

4. Limited Density Rural Dwelling

Since its inception, Class K has been the subject of a multitude of problems. This permit process was introduced into Mendocino County in 1981 to establish conformity of building standards for the widespread illegally constructed, and unpermitted rural habitable dwellings throughout Mendocino County at the time. It is still struggling to accomplish what it was created to do.

The Grand Jury sifted through thousands of pages of documents looking for any written documentation that would shed light on how PBS issues Class K building permits for legitimate dwellings, illegally constructed dwellings, and appurtenant structures. The Grand Jury found three policy documents that could be tied to the issuance of a Class K building permit. The Grand Jury also found a County Legislation Text that requests direction from the BOS to clarify the nature of appurtenant structures. The documents are Administrative Policy #1, Building Policy 03, Building Policy 08, and County Legislation Text 17-0179 (See Exhibit 6).

Administrative Policy #1 and Building Policy 03 require a California licensed engineer or architect to inspect all foundations that are constructed and completed without PBS building inspection or approval. A signed report that is consistent with the building plans must be submitted to PBS for approval by the Building Official prior to work resuming on the project. The Grand Jury could find no evidence, nor was any documentation provided, demonstrating that these policies are being enforced when issuing building permits for illegally constructed, pre-existing residential and commercial structures.

During interviews County officials were asked, "Are there policies and procedures for the issuance of Class K permits?" The frequent answer was that Mendocino County Code (MCC) Chapter 18.23 was the governing policy for Class K.This raised more questions than it answered. For example, if MCC Chapter 18.23 is the policy, where are the procedures? With the exception of Building Policy 08 (See Exhibit 7), the Grand Jury found no written procedure, memorandum, bulletin, or workflow that directly supported MCC 18.23.

During the Grand Jury review of all the workflow diagrams in PBS, a troublesome feature was revealed concerning a workflow labeled "*Building – Plan Review Required Procedure New Procedure 8/22/2025*" (See Exhibit 8). When printed on paper to be able to read the workflow diagram, it measured over eight feet in length. The workflow did not reference any County policy or procedure supporting any part of the workflow. It gave the Grand Jury the impression that it was created to conceal the gaps in the existing policies and procedures. California Health and Safety Code (HSC) section17958.12 was included with the PRA requests and cited by the Director of PBS as authority to give building officials independent discretion on issuing building permits, states:

> *HSC § 17958.12 (a) 1. "Building officials, pursuant to this code and the California Building Standards Code, have broad authority as part of their enforcement authority to render interpretations of the code and to adopt policies and procedures to clarify the application of its provisions."*

The Grand Jury does not dispute the authority of HSC section 17958.12. However, there are no policies or procedures outlining the County's interpretation of the building code. Allowing individual interpretation and individual application of discretion without policies and procedures referenced leads to inconsistent application of the law and can lead to bias or favoritism in building permit administration.

The MCC Chapter 18.23 is unique and does not conform entirely with the California Building Code Title 24 (CBC). It has very broad areas that are subject to individual discretion and interpretation, such as unconventional building materials, required building inspections, plans, and the definition of appurtenant structures. Clear written procedures must be adopted and put into place to implement MCC Chapter 18.23.

The Grand Jury found no written documentation pertaining to the inspection of illegally constructed residential and commercial structures for unconventional building materials, framing, plumbing, electrical, and mechanical. When questioned about inspection procedures for illegally constructed residential dwellings, the BOS and PBS personnel consistently pointed to building inspectors "discretion," rather than a defined or standardized process.

On February 23, 2026, the Grand Jury received new PBS policy information. Nine months after the GJ25 Report was published, new Building Policies #18 and #19 were approved and adopted on February 6, 2026 (See Exhibit 9). These new policies detail the requirements for permitting illegally constructed structures; however, they still fail to address the requirements of PRC section 4290/Title 14. On March 5, 2026, the Grand Jury made a PRA request to PBS asking for any additional updated policies, procedures, memorandums, bulletins, and

record revision logs for the Building Division that have been created or modified since January 1, 2026. On March 13, 2026, the Grand Jury received 10 updated building polices (See Exhibit 10). The Grand Jury is pleased to see that there is change occurring. However, there is still a need for direction to continue to create comprehensive policies and procedures for all processes within PBS.

5. Accountability

The State of California conducted an audit (Report #2025-049) into Mendocino County Offices of Controller and Auditor, and both found policies and procedures are lacking or non-existent. The Grand Jury published three reports within the last 10 years (2015-2016, 2016-2017, and 2024-2025) each time finding a lack of policies and procedures.

Within PBS, the Building Division has created and implemented very thorough "*Employee Performance Expectations"* for Building Inspectors (See Exhibit 11). In the "*Employee Performance Expectations"* points 11 and 12 are clear and concise as follows:
"*11. Read, understand and follow all formalized policies and procedures adopted by the Division, Department and County. This includes adherence to local and state code requirements*."

"*12. Follow all instructions and directives of your direct supervisor that do not violate any subsequent policies, ordinances, or laws. Always follow your chain of command regarding questions, concerns, comments, and process improvements, and be avoidant of seeking alternative answers to that of your direct supervisor through another supervisor, or the manager. If there is a concern regarding the instructions, or conflicting instruction, please refer to the County Employee Handbook for the appropriate pathway to resolution.*"

Points 11 and 12 appear to be appropriate for performance expectations. However, when a department does not have adequate policies and procedures in place, employees will not receive clear direction to meet the stated goals of the BOS *Mission Statement*, "*public safety, health, social, cultural, education, transportation, economic, and environmental needs of our communities*."

As stated in its *Mission Statement*, the BOS responsibility is to ensure that "*public safety, health, social, cultural, education, transportation, economic, and environmental needs of our communities*" are met. The BOS has failed to direct the CEO or PBS to adhere to the requirements of PRC section 4290/Title 14 or develop clear, concise and comprehensive policies and procedures for all divisions within PBS to ensure that the mission is achieved.

Conclusion – The cracks are getting wider and deeper.

The responsibility of how County departments conduct their daily operations for the people of Mendocino County rests on the shoulders of the BOS. Outside entities such as the California State Auditor and the Grand Jury have conducted investigations into County business and arrive at conclusions that contradict Departmental Directors' and Managers' reports to the BOS. The BOS must act to resolve these contradictions.

There are no written PBS policies and procedures enabling the County's implementation and compliance of PRC section 4290/Title 14 in the SRA and in the VHFHSZ within Mendocino County and pertaining to the issuance of building permits for illegally constructed dwellings, inspections of illegally constructed structures, and Class K appurtenant structures. All actions in these areas are based on institutional knowledge on an as needed basis and are subject to the individual interpretation and discretion of each Building Inspector.

The BOS *Mission Statement* indicates that Public Safety is one of its priorities. It is time for the BOS to take action to protect the people of Mendocino County. Clear direction must be given to create comprehensive written policies and procedures that encompass all aspects of Class K and PRC section 4290/Title 14.

Findings

F1. The BOS action taken by approving the response to the Grand Jury GJ25Report was a contravention to its *Mission Statement* and the *Principles of Office*.

F2. The lack of direction and unclear communication from the BOS to the CEO to manage, supervise, and maintain accountability in the daily operations within PBS has compromised public safety and best business practices.

F3. The BOS has not issued directives that would compel PBS' full compliance with all State laws and County ordinances by creating current and comprehensive policies and procedures.

F4. There remains a critical need for the BOS to provide direction to create, maintain, and enforce policies and procedures ensuring equitable services to the residents of Mendocino County.

F5. In most divisions in PBS, policies and procedures that exist are not comprehensive and are unclear.

F6. PBS staff are dedicated, hardworking individuals who desire a positive outcome for the public.

F7. The Cannabis Division's clear policies, procedures, and expectations for personnel that have been created for this division are exactly what is needed for the entire department and should be the standard for the other divisions within PBS.

F8. Lack of policies and procedures has resulted in the PBS adapting to a pattern of practice dependent on individual employees' institutional knowledge and discretion.

F9. Procedures that are incomplete, misnumbered, and have no style guidelines or retention logs, compel employees to rely on individual discretion and institutional knowledge.

F10. The safety of Mendocino County residents and their properties is left to the discretion of PBS employees due to inadequate implementation of PRC section 4290/Title 14.

F11. Building Division's documentation reveals incomplete, poorly maintained, and sporadic contradictory directions to its employees.

F12. PBS continues to misinterpret the term "pre-existing" for illegally constructed residential and commercial structures which, as implemented by the County, circumvents the requirements of PRC section 4290/Title 14.

F13. The County's inconsistencies in enforcing PRC section 4290/Title 14 enable an environment for favoritism, opportunity for bias, and continued failure to assure implementation of minimum wildfire protection standards.
.
F14: The BOS has failed to ensure compliance with PRC section 4290/Title 14 and to ensure implementation of comprehensive policies and procedures throughout PBS.

Recommendations

R1. The Grand Jury recommends that the Board of Supervisors give direction to the Chief Executive Officer to have, by December 1, 2026, a working draft of Policies and Procedures for all divisions within Planning and Building Services. The guidelines should be comprehensive, standardized, and easily accessible to all staff members to ensure that the processes are consistently followed and comply with regulatory requirements.
[F2, F3, F4, F5, F8, F9, F10, F11]

R2. The Grand Jury recommends that the Board of Supervisors give directions to the Chief Executive Officer to instruct Planning and Building Services to have a final version of Policy and Procedures for all divisions by March 1, 2027. **[F2, F3, F4, F5, F8, F9, F10, F11]**

R3. The Grand Jury recommends that the Board of Supervisors give direction to the Chief Executive Officer to have a working draft by October 15, 2026, of Policies and Procedures in all aspects of the implementation of PRC section 4290/Title 14. **[F10, F12, F13, F14]**

R4. The Grand Jury recommends that the Board of Supervisors give direction to the Chief Executive Officer to instruct Planning and Building Services to have a final version of Policy and Procedures for the application of PRC section 4290/Title 14 for all divisions by January 1, 2027. **[F10, F12, F13, F14]**

Requests for Responses

This section includes the process an organization will use to respond to the Grand Jury's findings and Recommendations. This section has Required Responses and Invited Responses. Elected officials have 90 days to respond to the report, and all organizations have 60 days to respond. In each response the following Penal Code sections 933 and 933.05 as provided below, apply.

Pursuant to California Penal Code sections 933 and 933.05, the Civil Grand Jury requests each entity or individual named below to respond to the enumerated Findings and Recommendations within specific statutory guidelines.

Responses to Findings shall be either:

- The respondent agrees with the finding.
- The respondent disagrees, wholly or partially with the finding, in which case the response shall specify the part of the finding that is disputed and shall include an explanation of the reasons therefor.

Responses to Recommendations shall be one of the following:

- The recommendation has been implemented, with a summary regarding the implemented action.
- The recommendation has not been implemented but will be in the future, within a specific period.
- The recommendation requires further analysis, with an explanation and the scope and parameters of an analysis or study, and a timeframe for the matter to be prepared for discussion by the officer or head of the agency where applicable. This time shall not exceed 6 months from the date of the publication of the Civil Grand Jury report.
- The recommendation will not be implemented because it is not warranted or is not reasonable, with an explanation therefor.

Required Response – Within 90 days

1. Mendocino County Board of Supervisors (All Findings and All Recommendations)

Invited Response – Within 60 days

2. Mendocino County Chief Executive Officer (All Findings and All Recommendations)

Responses are to be sent to:
The Honorable Judge Moorman
Mendocino County Superior Court
100 North State Street, Dept E
Ukiah CA 95482

Office of the County Counsel
County of Mendocino
501 Low Gap Road, Room 1030
Ukiah CA 95482

Mendocino County Civil Grand Jury
County of Mendocino
501 Low Gap Road, Room 1500
Ukiah CA 95482

This report is issued by 2025-2026 Mendocino County Civil Grand Jury

Important Note about Civil Grand Jury Findings:
The Civil Grand Jury derives Findings from testimony and evidence. All testimony and evidence given to the Civil Grand Jury remains confidential by law, and it is the Civil Grand Jury's responsibility to maintain it. California Penal Code §929 provides "…the name of any person, or facts that lead to the identity of any person who provided information to the Civil Grand Jury, shall not be released." further, 86 Ops. Cal. Atty. Gen. 101 (2003) prohibits Civil Grand Jury Witnesses from disclosing anything learned during their appearance including testimony given. This is to ensure the anonymity of witnesses and to encourage open and honest testimony.

Board of Supervisors
Mission Statement

The Mendocino County Board of Supervisors' mission is to create and maintain a responsive and responsible government that enhances the quality of life of the people of Mendocino County. The County's mission is to deliver services that meet: Public safety, health, social, cultural, education, transportation, transportation, economic, and environmental needs of our communities.

Principles of Office

Supervisors will adhere to the following principles. They will:

- Work in harmony to support the County's mission.
- Devote time, thought and study to their duties as board members, so that they may render effective and credible public service for the citizens of the County.
- Work with fellow board members in a spirit of cooperation so all issues, especially those which are controversial, may be debated openly and fairly, thereby protecting the dignity of the individuals involved in the public forum and decision-making process.
- Base decisions on all available facts, voting with conviction, without bias, and ultimately abiding and upholding the final majority decisions of the Board.
- Represent the entire County of Mendocino, while being sensitive to the special characteristics of each District.
- Respect the Ralph M. Brown Act, taking official actions in public sessions, yet maintaining the confidentiality of closed session deliberations.
- Remember an individual board member has no legal authority outside the meetings of the Board of Supervisors, thus they will conduct business with the citizenry, media, and County staff on this basis.
- Under all circumstances the primary function of the Board of Supervisors is to establish the policies by which the County of Mendocino is to be administered.
- Use the powers of the office honestly and constructively, communicating and promoting the needs of the community to the County and the needs of the County to the community.
- Encourage employee and citizen involvement in regulatory and policy development and to consider the perspectives of others as issues are discussed.
- Be responsible for professional growth by participating in educational conferences, workshops, and training sessions offered by local and State organizations.
- Be informed of the State and Federal government activities and the positions taken by Supervisor organizations regarding these matters.

Exhibit Index

Exhibit 1

Description: Planning and Building Services: Policies, Procedures, Bulletins and Memos
Source: Mendocino County Planning and Building Services
Date: PRA – October 1, 2025

Exhibit 2

Description: Planning and Building Services: Building Policy 05 – Bridge Permits
Source: Mendocino County Planning and Building Services
Date: November 4, 1991/Revised: January 14, 2013

Exhibit 3

Description: Planning and Building Services: Building Bulletin #5
Source: Mendocino County Planning and Building Services
Date: March 25, 1992

Exhibit 4

Description: CAL FIRE: 9000 Fire Prevention/9040 PRC 4290 Procedures – Reviewing Process
Source: Mendocino County Planning and Building Services
Date: Revised October 8, 2021, Revised July 17, 2025

Exhibit 5

Description: California Code of Regulations, Title 14. Natural Resources
Division 1.5, Department of Forestry and Fire Protection
Chapter 7. Fire Protection-Subchapter 2. State Minimum Fire Safe Regulations
Source: Department of Forestry and Fire Protection
Date: Current Version

Exhibit 6

Description: Mendocino County Legislation Text, Administrative Policy #1, Building Policy 03, Building Policy 08,
Source: Mendocino County Building and Planning Services
Date: March 13, 2017

Exhibit Index

Exhibit 7

Description: Planning and Building Services, Building Policy #08
Subject: Chapter 18.23 -Regulations for Limited Density
Rural Dwellings: Section: 18.23.250Source: Mendocino County Building and Planning Services
Source: Mendocino County Building and Planning Services
Date: January 24, 2007

Exhibit 8

Description: Building Plan Review Required Workflow
Source: Mendocino County Building and Planning Services
Date: August 22, 2025

Exhibit 9

Description: Building Policy #18
Process for Permitting a Residential Structure Built with a Permit
Description: Building Policy #19
Procedure for Permitting a Non-residential Structure Built without a Permit
Source: Mendocino County Building and Planning Services
Date: Previous Policy: Administrative Bulletin #1
New Policy: February 6, 2026

Exhibit 10

Description: New Planning and Building Services Policies and Procedures Spreadsheet
Source: Mendocino County Building and Planning Services
Date: First Revision: February 5, 2026
Last Revision: March 13, 2026

Exhibit 11

Description: Planning and Building Services Inspector Performance Expectations
Source: Mendocino County Building and Planning Services
Date: No revision date noted

Exhibit 1

Building Divisions' Policies

Number	Title	Revision Date	Description	PRC 4290 / Title 14	Duplicate
1	Cannabis Processing in Residental Structures	No Date	On-site drying, curing, grading, trimming, and/or packaging of cannabis, defined as processing by Title 10A		
2	Foundation Only Permits	1/14/2013	Building offical is authorized to issue a permit for the construction of foundations before construction documents are submitted		
3	Foundations completed without inspections	5/14/2015	minimum guideline for obtaining inspection compliance on Title 24 projects in which a foundation has been constructed without receiving inspection approvals by this department.		
4	Building Application and permit Extension	10/25/2024	Outline the process of when a building permit or application has expired		
5	Bridge Permits	1/14/2013	Minimum requirements as per Sec. 202 of the CBC.	Yes	
6	Hours of Attendance and lunch breaks	5/21/2015	minimum guideline for obtaining inspection compliance on Title 24 projects in which a foundation has been constructed without receiving inspection approvals by this department.		
7	Office policy regarding plan check	10/17/1997	Permit fee sheet shall be filled out entirely prioe to issuing any permit.		
8	Chapter 18.23 definition of a half story	1/24/2007	Any story with a headroom clearance of less than seven feet for it's entire area		
9	Re-Roof Requirements	No Date	A permit is required for all re-roof installations and repairs prior to beginning work.		
10	Revision and recheck submittal	11/21/2023	Corrections to existing construction plans		Yes
11	Revision and recheck submittal	11/6/2023	Corrections to existing construction plans		Yes
12	APPLICATION SUBMITAL PROCESS	10/11/2022	The purpose of application submittal process is to comply with the California Building Code and Mendocino County Code. **The links in the policy are not vaild**		
13	Consolidation of Inspectio	5/21/2015	it will be department policy to encourage the consolidation of inspections, whenever possible.		
14	NEC Sec 230-3 Service conductors	3/1/1996	Service conductors shall not pass through another building.		
15	Pre-manufactured metal shipping and cargo containers	1/14/2013	Use of cargo and railroad box cars as residential storage buildings		
16	Office policy regarding public phone calls	10/17/1997	Setting priorities for taking phone calls and serving the public at the counter		
17	Policy regarding allowable number of meters	10/13/2009	Defining the number of allowable electrical meters on a property		
18	Office policy regarding demolition permit	3/27/1998	Must have a copy of the asbestos notification form ADRN-2791		
19	Roadside Produce Stands	3/21/2015	Small, single, roadside uncovered produce stands are exempt from a building permit		
20	Title 24 Energy Conservation Standards	1/15/2013	Defining the scope of Title 24 energy conservation standards		
21	Office policy regarding agricultural well electrical service panels	10/14/2009	One panel for every pump on the parcel of land		
22	Plan review timelines	5/21/2015	Establishing time frames to process plans		
23	Residential emergency egress windows	1/16/2023	Location of installed rescue windows as per CBC sec. 104		
24	Cancellation of permit applications	7/9/1998	Permit cancellation must be done in writing and all fee's paid		
25	Changes to approved plans	1/13/2013	Description of the plan change process		
26	Demolishing multiple structures on a single permit	6/6/2024	To provide a consistent process to be followed that allows applicants to demolish multiple structures with a single permit application and one permit fee.		
27	Incidental work at inspection site	5/21/2015	As inspectors observe minor incidental work which is an addition to work, which has received a permit, they are authorized to officially inspect such work for compliance within the California construction codes.		
28	Temporary power to work site	10/14/2009	Defining use of temporary electrical meters.		

Building Divisions' Policies

Number	Title	Revision Date	Description	PRC 4290 / Title 14	Duplicate
No record					
30	Re-inspection fee	5/21/2015	A re-inspection fee shall be charged when an inspector has written an official notice of inspection and upon returning to re-inspect the corrections, the owner, agent, or contractor has not completed all the items on the notice.		
31	Solar panel installations	1/25/2013	Solar panels installed on any roof shall be approved and permitted by the building official, plans examiner or building inspector prior to installation.		
No record					
No record					
34	Electrical meter (utility owned)	11/17/2017	An informational bulletin to help staff determine when an electrical meter service panel permit may be issued over the counter		
No record					
36	Approving energy compliance for unpermitted constructed homes	1/25/2013	Approving energy compliance for unpermitted constructed homes as per CBC sec. 104		
37	Converting SFD to storage	10/10/2000	Description of what is required to convert SFD to storage. **It's written as a procedure and is refered to buliding division office policy 10.**		
38	Roofing attachment inspections	1/25/2013	Concealed roofing attachments not visable for compliance inspections from building inspectors. **Allows for self certification of contractor.**		
No record					
No record					
No record					
42	Investigating violations and issuing notice of violation	7/10/2008	The following **procedure** shall be followed to investigate a violation and prior to issuing a notice of violation		
43	Inspectors issuing notice of violations	2/26/2009	The following procedure shall be followed when issuing a notice of violation		
44	Agricultural Exempt permit fees	No date	The building permit fee for an Ag Exempt project will be calculated by the Planning and Building Administrative		
No record					
46	Barriers for swimming pools	11/5/1993	A discretionary appendix of barriers that the County will accept.		

Number	Title	Revision date	Description	PRC 4290 / Title 14	Duplicate
1	DocuSign for signatures	6/21/2024	Procedure for digital permit issuance via docusign		
2	Ground mount photovoltaic permit & inspection checklist	2/16/2023	Procedural steps for the approriate plans and documents needed for the permit submittal and plan review process. **No reference to a policy. Links provided in procedure are not vailid.**		
3	BUILDING DIVISION REFUND PROCEDURE	12/18/2023	Refund requests are typically initiated by the payee of a building application submittal or issued permit, unless staff is aware of an error, **No reference to a policy**		
4	Hoop House Determination	4/11/2017	The goals and objectives of this procedure are to provide a uniform procedure by the department and clear direction to staff in the determination of a building permit for the aforementioned purpose. **No reference to a policy.**		
No reference number	Demolishing multiple structures on a single permit	6/6/2017	To provide a consistent process to be followed that allows applicants to demolish multiple structures with a single permit application and one permit fee. **Same as Building Policy 26**		
No reference number	Prepaid Plan Check for Building Permit Aplication Submittal, PBS Admin-0013	9/2/2022	To provide guidance on the procedural steps necessary to correctly determine the prepaid plan review fees for any type of building permit submitted		

Number	Title	Revision date	Description	PRC 4290 / Title 14	Other
1	Certification of engineered grading	3/25/1992	The building permit will not be finaled until the statement of compliance for the grading has been received.		
2	HCD approval for modification of mobile home	10/15/1996	Exceptions to HCD approval		
3	Plumbing cleanouts	6/26/1991	Defining new exceptions for cleanouts		
4	Requests for gas and electrical utilities to be released before final	4/15/1992	Establishing allowable conditions		
5	Cargo containers and railroad cars	3/25/1992	Definitions, requirments and exceptions for cargo and rail car use	YES, AB 4290	
6	Change of ownership	3/4/1993	Defining time frames for change of ownership or permit applicaint		
7	Incorperating recycling areas into building construction projects	8/31/1993	The County is cpresently preparing a local recycling ordinance		
8	Site development dtorm water drainage	6/24/2011	Establishing time line and criteria for storm water drainage		
No record					
10	APCD review for building permits	3/7/1993	Defining what projects are subject for review		
11	Use of studer type vents	2/15/2008	Defining the criteria for when a studer type vent can be used		
12	Incidental work at an inspection site	11/8/1993	Defining criteria of when a building inspector can inspect unpermitted work that is going on a permitted worksite		**Contradicts policy 42 and 43**
No record					
14	When is a soil investigation required	No date	Clarification of when a soils investigation is required as part of a building permit application		
15	Calling applicant when building permit is ready	6/22/1995	Direction to staff to call aplicant when permit is ready		
No record					
17	Plan requirements for metal car ports	7/17/2001	Establishing criteria for plans for metal car ports		

Number	Title	Revison date	Description	PRC 4290 / Title 14	Other
No record					
2	Requirement for compaction of grading	3/25/1992	Sec. 7010 of the UBC provides that all fills be compacted to a minimum of 90%		
3	GRADING IN AN ISOLATED SELF-CONTAINED LOCATION	12/28/2020	A procedure of how to make a determination for garading exemption		
4	Definition of status of plan review and permit	7/29/2025	To provide precise definitions for building permit applications		
5	Clarification to the Environmental Health Ordinance No.4399	8/11/2021	Accessible Portable Bathrooms For seasonal cultivation sites		
6	Habitable/non-habitable plan check	5/30/2018	Defining criteria on calculating square footage		
7	Permit authority for Manufactured/mobile homes	5/23/2019	Deck requirements from HCD for decks		
8	Holiday field inspections	11/17/2020	Establishing criteria for holiday inspections		
9	Retaining wall permit requirements	11/20/2020	Establishing criteria for when a permit is required for a retaining wall		
10	Office Protocol for Building Inspectors	5/13/2020	To improve efficiency among the Building Inspectors when working in the office		
11	Residential ground mount and roof mount solar systems	7/22/2019	Establishing minimum criteria for residential solar systems		
12	Inspection requests and scheduling with expired permits	12/29/2023	Establishing procedures for expired permit and inspections		**No Policy or procedure on file for this topic**
13	Replacing structures in burn area	12/28/2017	Direction to residents who lost structures in the Redwood complex wildfire		
14	Pond Exemptions	6/15/2016	Developing a process for pond exemptions		**Does not follow criteria on website**
15	Fire retardant roofs	7/27/1995	New roofing requirements from CBSC		

COUNTY OF MENDOCINO
DEPARTMENT OF PLANNING AND BUILDING SERVICES
860 NORTH BUSH STREET · UKIAH · CALIFORNIA · 95482
120 WEST FIR STREET · FORT BRAGG · CALIFORNIA · 95437

STEVE DUNNICLIFF, DIRECTOR
Telephone 707-463-4281
FAX 707-463-5709
FB PHONE: 707-964-5379
FB FAX: 707-961-2427
pbs@co.mendocino.ca.us
www.co.mendocino.ca.us/planning

Building Policy 05

Subject: Bridge Permits
Bridges meet the definition of a structure as per Section 202 of the California Building Code and require permits and approvals from Mendocino County Department of Planning and Building Services.

Submittal Requirements:

1) Bridges planned for construction or placement on private property require a permit from the Planning and Building Services Department (Section 105 of the California Building Code). Bridges on County Roads require permits from the County Department of Transportation (707-463-4363).
2) A permit application declaring the use, purpose and type of construction of the bridge.
3) Three copies of an 8 1/2" X 11" plot plan.
4) Three sets of construction plans designed by a California Licensed Engineer or Architect.
5) "Railcar" bridges shall be accompanied by structural calculations and be certified by inspection, by the Architect or Engineer to perform as designed.
6) All welding shall receive a special inspection as required by Chapter 17 of the California Building Code. The special inspector must be preapproved by the Building Official.
7) Three sets of erosion and sediment plans meeting the Green Building Standards Code and/or any Mendocino County Ordinance, whichever is more stringent.
8) Two copies of engineering calculations designed by a California Licensed Engineer or Architect for the foundation and bridge.
9) Bridges intended either for motorized vehicles, pedestrians or a combination of both must be designed by an Architect and/or Engineer licensed in the State of California.
10) A soils report is required (Section 1803 of the California Building Code). All foundation and bridge construction shall be designed by a qualified California Licensed Architect and/or Engineer. The Architect and/or Engineer must provide design calculations for the bridge including wind and seismic loads.
11) Abutments and foundations shall be designed by a California Licensed Engineer or Architect and must take into account the scoring action of streams or rivers.
12) The bottom of the super structure shall be one foot above the 100 year base flood elevation, if applicable.
13) It is this Department's policy to allow the design professional to set the design parameters of the bridge; however, Cal Fire (707-459-7414) must also approve all bridges, and they currently require a 40,000 pound minimum weight limit and a 10 foot minimum roadway width.
14) Guards are required. ASHTO or Cal Trans guards are acceptable with or without restraining curbs. A current edition of the California Building Code guard is acceptable with restraining curbs.
15) In State Responsibility Areas (Cal Fire) Bridges shall have 40,000 lb. load capacity and minimum 15 foot vertical clearance. Appropriate signage including weight limits, vertical clearance, one way road and single lane conditions shall be posted. One lane bridges shall provide an unobstructed view from one end to the other with turnouts at both ends. (California Code of Regulations, Title 14 Section 1273.07

16) The applicant should also apply for a permit from the California Department of Fish and Wildlife if a watercourse is being traversed (707-944-5500).

Bridge design guidelines can also be obtained from Cal Trans (707-445-6600) or ASHTO (American Society of Highway and Transportation Officials).

This policy is derived from Section 104 of the California Building Code which authorizes the Building Official to render interpretations of the code and adopt policies and procedures to clarify the application of its provisions.

Dated: November 4, 1991 **Revised: January 14, 2013**

Mendocino County Planning and Building Services
Building Inspection Division

Chris Warrick
Chief Building Official

BUILDING BULLETIN #5 SEE #9 TOO

SUBJECT: Cargo Containers and Railroad Cars

The following guidelines shall be followed in the plan check and issuance of building permits for cargo containers and railroad cars:

Definitions

Cargo Container: A prefabricated structure designed for use as an individual shipping container in accordance with International Standards ISO 668, ISO 1496, or a container qualified by a California registered civil or structural engineer or architect for conformance with the Uniform Building Code.

Railroad Car: A vehicle moved on wheels designed to travel on a permanent road with rails fixed to ties, approved by the United States Department of Transportation.

Permit Requirements

(1) Three (3) plot plans indicating the location of the cargo container/railroad car in relation to all property lines, adjacent buildings, and the required setbacks, as stated in the zoning Ordinance, shall be submitted for approval.

(2) a. All cargo containers/railroad cars shall be classified as Group B, Division 2, occupancies and shall meet the requirements for fire-resistive construction, as adopted by Mendocino County Ordinance.

b. These structures are to be used as allowed in a B-2 occupancy, and plans shall be prepared by a California licensed architect or civil or structural engineer to reflect compliance with the Mendocino County Code and California Code of Regulations, Title 24.

c. Cargo containers/railroad cars may be used for temporary storage facilities or job shacks during the course of a construction project, provided the cargo container/railroad cars are removed from the site within seven (7) days of completion of the construction project.

(3) Cargo containers/railroad cars may be placed side by side on the same lot. "Side by side" shall mean, "cargo containers/railroad cars placed such that the distance between the exterior walls is less than 20 feet." The maximum projected roof area allowed for side by side placement shall not exceed 1000 square feet or five (5) cargo containers/railroad cars, whichever is more restrictive.

(4) Cargo containers/railroad cars shall be anchored to prevent overturning and sliding by means of an engineered tie-down system.

Exceptions

a. Cargo containers/railroad cars with a projected roof area of less than 400 square feet do not require a tie-down system.

b. In lieu of an engineered tie-down system, each corner of the cargo container/railroad car(s) shall be anchored to prevent movement with auger-type anchors and corner cable ties. Each auger-type anchor shall be capable of developing a pullout capacity of no less than 3000 pounds. The auger shall be fastened to the cargo container/railroad car with a minimum of a 7/16 inch cable and a minimum of two (2) cable clamps.

   Cargo containers/railroad cars shall be tied together at the top and bottom and at each end with a minimum of 7/16 inch cable and a minimum of two (2) cable clamps.

(5) When a cargo container/railroad car is located such that fire-resistive construction of the exterior wall is required, the construction shall be as described below:

   The inside wall located where fire-resistive construction is required shall have two (2) layers of Type X gypsum wallboard fastened as per the 1988 Uniform Building Code to noncombustible furring strips spaced at 16 inches on center.

(6) The fees shall be charged based on minimum valuation construction type for occupancy.

(7) The provisions of this bulletin shall not prohibit other uses or configurations when plans signed by a civil engineer or architect are submitted which show compliance with the Uniform Building Code.

(8) The provisions of AB4290 (Fire Safe regulations) shall apply.

Dated: March 25, 1992 Reaffirmed:

Mendocino County Planning & Building Services
Building Inspection Division

[redacted]
CHIEF BUILDING INSPECTOR

CAL FIRE Mendocino Unit
9000 Fire Prevention
9040 PRC 4290 Procedures- Reviewing Process
Revised October 8th, 2021

The Mendocino Unit on January 1st, 2022, will implement the following procedures with regards to the PRC 4290 and State Fire Safe Regulation review process:

1. Application Acceptance

All State Fire Safe Regulation applications accepted by the Unit will have the minimum following information attached:

A. State Fire Safe Regulation Questionnaire
B. Mendocino County Planning and Building Services Application Permit number
C. Occupancy classification assigned by the county
D. Site plan of the project area

Applications that do not have the listed items attached, or if additional documentation from the Unit is required, the application will be returned to the applicant.

1A. Applications for Existing Structures

The Mendocino Unit will not review State Fire Safe Regulation applications for any pre-existing, unpermitted structures.

Unpermitted single-family residences shall be inspected through the Defensible Space Program. Applicants can schedule Defensible Space Inspection via the CAL FIRE website at www.fire.ca.gov/dspace. The applicants can follow the links under the AB 38 Inspection request. A paper copy of the LE-100(a) form, as well as a digital copy will be provided to the requestor. The LE-100(a) form shall serve as the Unit's official proof of inspection to fulfil the county's requirements for existing single family dwelling units.

2. Projects that require PRC 4290/ State Fire Safe Regulation Applications

The following projects are required to be reviewed under the State fire Safe Regulations prior to permit issuance by the local Authority Having Jurisdiction:

A. The perimeters and access to all residential, commercial, and industrial building construction within the SRA approved after January 1, 1991, and those approved

after July 1, 2021 within the VHFHSZ in Local Responsibility Area.

This includes the following:

1. Single Family Dwelling Units
2. Remodels or additions of existing structures that extend the current permitted footprint
3. Agricultural buildings
4. Commercial Structures

B. All tentative and parcel maps or other developments approved after January 1, 1991.

C. The installation of modular, mobile, and manufactured homes.

D. Parcels that were formed prior to 1991, but did not make provisions for access to Buildings.

This includes the following:

1. Public and private roads (except those for agricultural and logging use)
2. Driveways
3. Roadway structures

3. Projects that do not require PRC 4290/ State Fire Safe Regulation Applications

The following projects are excluded from the PRC 4290/ State Fire Safe Regulation program:

A. Remodels that do not enlarge the current structure footprint
B. Solar Panels (roof or ground mounted)
C. Junior or Accessory Dwelling Units that comply with Government Code Sections 65852.2 or 6585.22
D. Shipping containers that are not classified as being used for residential occupancy or commercial use (residential dwelling units, drying rooms, chemical storage, etc.)
E. Hoop Houses or Greenhouses used for personal use.
F. Cellular Towers*
G. Decks, fences, swimming pools, etc.
H. Roads utilized for agriculture use (i.e., Logging roads, vineyards, etc.)
I. Structures that the county ordinarily would not require a permit for

J. Structures that were lost due to wildfire, providing that the building is within the same footprint as the original structure

*The defensible space around communications sites is 300' or to the property line as allowed under PRC 4291.3.

4. Final Inspections

When the project is complete, the applicant may request a final inspection from the Mendocino Unit Fire Prevention Bureau. These inspections are to be scheduled through the Mendocino Unit office technician.

Applicants whose projects that pass the final inspection shall receive via the US Mail, electronically, or both, a copy of the inspection form. This shall serve as the Unit's official approval to the county that the project has met the State Fire Safe Regulation requirements.

In the event the project does not meet the required standards, the applicant will be provided via US Mail, electronically, or both, a notification as to the deficiencies observed. Once corrected, the applicant may request a second inspection.

Additionally, an LE-100a shall be completed and recorded on the collector application for each PRC 4290 project inspected.

Responsibility: P1123

Date Enacted: 12/13/2021

Approved By: Jeff Lahaye
Unit Chief, Mendocino Unit

Docusign Envelope ID: 31FD404E-9865-4773-B88C-1024B21C7E1F

CAL FIRE Mendocino Unit
9000 Fire Prevention
9040 PRC 4290 Procedures- Reviewing Process
Revised July 17, 2025.

The Mendocino Unit on January 1st, 2022, will implement the following procedures with regards to the PRC 4290 and State Fire Safe Regulation review process:

1. Application Acceptance

All State Fire Safe Regulation applications accepted by the Unit will have the minimum following information attached:

A. State Fire Safe Regulation Questionnaire
B. Mendocino County Planning and Building Services Application Permit number
C. Occupancy classification assigned by the county
D. Site plan of the project area

Applications that do not have the listed items attached, or if additional documentation from the Unit is required, the application will be returned to the applicant.

1A. Applications for Existing Structures

The Mendocino Unit will not review State Fire Safe Regulation applications for any pre-existing, unpermitted structures.

Unpermitted single-family residences shall be inspected through the Defensible Space Program. Applicants can schedule Defensible Space Inspection by contacting the CAL FIRE Station closest to there property. A paper copy of the LE-100(a) form, as well as a digital copy will be provided to the requestor. The LE-100(a) form shall serve as the Unit's official proof of inspection to fulfil the county's requirements for existing single family dwelling units.

2. Projects that require PRC 4290/ State Fire Safe Regulation Applications

The following projects are required to be reviewed under the State fire Safe Regulations prior to permit issuance by the local Authority Having Jurisdiction:

A. The perimeters and access to all residential, commercial, and industrial building construction within the SRA approved after January 1, 1991, and those approved

Docusign Envelope ID: 31FD404E-9865-4773-B88C-1024B21C7E1F

after July 1, 2021 within the VHFHSZ in Local Responsibility Area.

This includes the following:

1. Single Family Dwelling Units
2. Remodels or additions of existing structures that extend the current permitted footprint
3. Commercial Structures

B. All tentative and parcel maps or other developments approved after January 1, 1991.

C. The installation of modular, mobile, and manufactured homes.

D. Parcels that were formed prior to 1991, but did not make provisions for access to Buildings.

This includes the following:

1. Public and private roads (except those for agricultural and logging use)
2. Driveways
3. Roadway structures

3. Projects that do not require PRC 4290/ State Fire Safe Regulation Applications

The following projects are excluded from the PRC 4290/ State Fire Safe Regulation program:

A. Remodels that do not enlarge the current structure footprint
B. Solar Panels (roof or ground mounted)
C. Shipping containers that are not classified as being used for residential occupancy or commercial use (residential dwelling units, drying rooms, chemical storage, etc.)
D. Hoop Houses or Greenhouses used for personal use/commercial use.
E. Cellular Towers*
F. Decks, fences, swimming pools, etc.
G. Roads utilized for agriculture use (i.e., Logging roads, vineyards, etc.)
H. Structures that the county ordinarily would not require a permit for.
I. Any project that is classified as Miscellaneous/Group U.

Docusign Envelope ID: 31FD404E-9865-4773-B88C-1024B21C7E1F

J. Structures that were lost due to wildfire, providing that the building is within the same footprint as the original structure

*The defensible space around communications sites is 300' or to the property line as allowed under PRC 4291.3.

4. Final Inspections

When the project is complete, the applicant may request a final inspection from the Mendocino Unit Fire Prevention Bureau. These inspections are to be requested through the Mendocino Unit office technician.

Applicants whose projects that pass the final inspection shall receive via the US Mail, electronically, or both, a copy of the inspection form. This shall serve as the Unit's official approval to the county that the project has met the State Fire Safe Regulation requirements.

In the event the project does not meet the required standards, the applicant will be provided via US Mail, electronically, or both, a notification as to the deficiencies observed. Once corrected, the applicant may request a second inspection.

Responsibility P1124
Approved By Brandon Gunn
Unit Chief, Mendocino Unit

DocuSigned by:
Brandon Gunn
A0D10F0083 1E43E...

Date Enacted: 7/18/2025

California Code of Regulations
Title 14. Natural Resources
Division 1.5. Department of Forestry and Fire Protection
Chapter 7. Fire Protection
Subchapter 2. State Minimum Fire Safe Regulations

Article 1. Administration

§ 1270.00. Title.

Subchapter 2 shall be known as the “State Minimum Fire Safe Regulations,” and shall constitute the minimum Wildfire protection standards of the California Board of Forestry and Fire Protection.

NOTE: Authority cited: Section 4290, Public Resources Code. Reference: Sections 4102, 4126, 4127 and 4290, Public Resources Code.

§ 1270.01. Definitions.

The following definitions are applicable to Subchapter 2.
(a) Agriculture: Land used for agricultural purposes as defined in a Local Jurisdiction's zoning ordinances.
(b) Board: California Board of Forestry and Fire Protection.
(c) Building: Any Structure used or intended for supporting or sheltering any use or Occupancy, except those classified as Utility and Miscellaneous Group U.
(d) CAL FIRE: California Department of Forestry and Fire Protection.
(e) Dead-end Road: A Road that has only one point of vehicular ingress/egress, including cul-de-sacs and Roads that loop back on themselves
(f) Defensible Space: The area within the perimeter of a parcel, Development, neighborhood or community where basic wildland fire protection practices and measures are implemented, providing the key point of defense from an approaching Wildfire or defense against encroaching Wildfires or escaping Structure fires. The perimeter as used in this regulation is the area encompassing the parcel or parcels proposed for construction and/or Development, excluding the physical Structure itself. The area is characterized by the establishment and maintenance of emergency vehicle access, emergency water reserves, Road names and Building identification, and fuel modification measures.
(g) Development: As defined in section 66418.1 of the California Government Code.
(h) Director: Director of the Department of Forestry and Fire Protection or their designee.
(i) Driveway: A vehicular pathway that serves no more than four (4) Residential Units and any number of non-commercial or non-industrial Utility or Miscellaneous Group U Buildings on each parcel. A Driveway shall not serve commercial or industrial uses at any size or scale.
(j) Exception: An alternative to the specified standard requested by the applicant that may be necessary due to health, safety, environmental conditions, physical site

limitations or other limiting conditions, such as recorded historical sites, that provides mitigation of the problem.
(k) Fire Apparatus: A vehicle designed to be used under emergency conditions to transport personnel and equipment or to support emergency response, including but not limited to the suppression of fires.
(*l*) Fire Authority: A fire department, agency, division, district, or other governmental body responsible for regulating and/or enforcing minimum fire safety standards in the Local Jurisdiction.
(m) Fire Hydrant: A valved connection on a water supply or storage system for the purpose of providing water for fire protection and suppression operations.
(n) Fuel Break: A strategically located area where the volume and arrangement of vegetation has been managed to limit fire intensity, fire severity, rate of spread, crown fire potential, and/or ember production.
(o) Greenbelts: open space, parks, wildlands, other areas, or a combination thereof, as designated by Local Jurisdictions, which are in, surround, or are adjacent to a city or urbanized area, that may function as Fuel Breaks and where Building construction is restricted or prohibited.
(p) Greenways: Linear open spaces or corridors that link parks and neighborhoods within a community through natural or manmade trails and paths.
(q) Hammerhead/T: A “T” shaped, three-point Turnaround space for Fire Apparatus on a Road or Driveway, being no narrower than the Road or Driveway that serves it.
(r) Hazardous Land Use: A land use that presents a significantly elevated potential for the ignition, prolonged duration, or increased intensity of a Wildfire due to the presence of flammable materials, liquids, or gasses, or other features that initiate or sustain combustion. Such uses are determined by the Local Jurisdiction and may include, but are not limited to, power-generation and distribution facilities; wood processing or storage sites; flammable gas or liquids processing or storage sites; or shooting ranges.
(s) Local Jurisdiction: Any county, city/county agency or department, or any locally authorized district that approves or has the authority to regulate Development.
(t) Municipal-Type Water System: A system having water pipes servicing Fire Hydrants and designed to furnish, over and above domestic consumption, a minimum of 250 gpm (950 L/min) at 20 psi (138 kPa) residual pressure for a two (2) hour duration.
(u) Occupancy: The purpose for which a Building, or part thereof, is used or intended to be used.
(v) One-way Road: A Road that provides a minimum of one Traffic Lane width designed for traffic flow in one direction only.
(w) Residential Unit: Any Building or portion thereof which contains living facilities including provisions for sleeping, eating, cooking and/or sanitation, for one or more persons. Manufactured homes, mobile homes, and factory-built housing are considered Residential Units.
(x) Ridgeline: The line of intersection of two opposing slope aspects running parallel to the long axis of the highest elevation of land; or an area of higher ground separating two adjacent streams or watersheds.
(y) Road: A public or private vehicular pathway to more than four (4) Residential Units, or to any industrial or commercial Occupancy.

(z) Road or Driveway Structures: Bridges, culverts, and other appurtenant Structures which supplement the Traffic Lane or Shoulders.
(aa) Same Practical Effect: As used in this subchapter, means an Exception or alternative with the capability of applying accepted wildland fire suppression strategies and tactics, and provisions for fire fighter safety, including:
(1) access for emergency wildland fire equipment,
(2) safe civilian evacuation,
(3) signing that avoids delays in emergency equipment response,
(4) available and accessible water to effectively attack Wildfire or defend a Structure from Wildfire, and
(5) fuel modification sufficient for civilian and fire fighter safety.
(bb) Shoulder: A vehicular pathway adjacent to the Traffic Lane.
(cc) State Responsibility Area (SRA): As defined in Public Resources Code sections 4126-4127; and the California Code of Regulations, title 14, division 1.5, chapter 7, article 1, sections 1220-1220.5.
(dd) Strategic Ridgeline: a Ridgeline identified pursuant to § 1276.02(a) that may support fire suppression activities or where the preservation of the Ridgeline as an Undeveloped Ridgeline would reduce fire risk and improve fire protection.
(ee) Structure: That which is built or constructed or any piece of work artificially built up or composed of parts joined together in some definite manner.
(ff) Traffic Lane: The portion of a Road or Driveway that provides a single line of vehicle travel.
(gg) Turnaround: An area which allows for a safe opposite change of direction for Fire Apparatus at the end of a Road or Driveway.
(hh) Turnout: A widening in a Road or Driveway to allow vehicles to pass.
(ii) Undeveloped Ridgeline: A Ridgeline with no Buildings.
(jj) Utility and Miscellaneous Group U: A Structure of an accessory character or a miscellaneous Structure not classified in any specific Occupancy permitted, constructed, equipped, and maintained to conform to the requirements of Title 24, California Building Standards Code.
(kk) Vertical Clearance: The minimum specified height of a bridge, overhead projection, or vegetation clearance above the Road or Driveway.
(*ll*) Vertical Curve: A curve at a high or low point of a Road that provides a gradual transition between two Road grades or slopes.
(mm) Very High Fire Hazard Severity Zone (VHFHSZ): As defined in Government Code section 51177(i).
(nn) Wildfire: Has the same meaning as “forest fire” in Public Resources Code Section 4103.

NOTE: Authority cited: Section 4290, Public Resources Code. Reference: Sections 4290 and 4291, Public Resources Code.

§ 1270.02. Purpose.

(a) Subchapter 2 has been prepared and adopted for the purpose of establishing state minimum Wildfire protection standards in conjunction with Building, construction, and Development in the State Responsibility Area (SRA) and, after July 1, 2021, the Very

High Fire Hazard Severity Zones, as defined in Government Code § 51177(i) (VHFHSZ).
(b) The future design and construction of Structures, subdivisions and Developments in the SRA and, after July 1, 2021, the VHFHSZ shall provide for basic emergency access and perimeter Wildfire protection measures as specified in the following articles.
(c) These standards shall provide for emergency access; signing and Building numbering; private water supply reserves for emergency fire use; vegetation modification, Fuel Breaks, Greenbelts, and measures to preserve Undeveloped Ridgelines. Subchapter 2 specifies the minimums for such measures.

NOTE: Authority cited: Section 4290, Public Resources Code. Reference: Sections 4290 and 4291, Public Resources Code.

§ 1270.03. Scope.

(a) Subchapter 2 shall apply to:
(1) the perimeters and access to all residential, commercial, and industrial Building construction within the SRA approved after January 1, 1991, and those approved after July 1, 2021 within the VHFHSZ, except as set forth below in subsection (b).
(2) the siting of newly installed commercial modulars, manufactured homes, mobilehomes, and factory-built housing, as defined in Health and Safety Code sections 18001.8, 18007, 18008, and 19971;
(3) all tentative and parcel maps or other Developments approved after January 1, 1991; and
(4) applications for Building permits on a parcel approved in a pre-1991 parcel or tentative map to the extent that conditions relating to the perimeters and access to the Buildings were not imposed as part of the approval of the parcel or tentative map.
(b) Subchapter 2 does not apply where an application for a Building permit is filed after January 1, 1991 for Building construction on a parcel that was formed from a parcel map or tentative map (if the final map for the tentative map is approved within the time prescribed by the local ordinance) approved prior to January 1, 1991, to the extent that conditions relating to the perimeters and access to the Buildings were imposed by the parcel map or final tentative map approved prior to January 1, 1991.
(c) Affected activities include, but are not limited to:
(1) permitting or approval of new parcels, excluding lot line adjustments as specified in Government Code (GC) section 66412(d);
(2) application for a Building permit for new construction not relating to an existing Structure;
(3) application for a use permit;
(4) Road construction including construction of a Road that does not currently exist, or extension of an existing Road.
(d) The standards in Subchapter 2 applicable to Roads shall not apply to Roads used solely for Agriculture; mining; or the management of timberland or harvesting of forest products.

NOTE: Authority cited: Section 4290, Public Resources Code. Reference: Sections 4290 and 4291, Public Resources Code.

§ 1270.04. Provisions for Application of these Regulations.

This Subchapter shall be applied as follows:
(a) the Local Jrisdictions shall provide the Director of the California Department of Forestry and Fire Protection (CAL FIRE) or their designee with notice of applications for Building permits, tentative parcel maps, tentative maps, and installation or use permits for construction or Development within the SRA, or if after July, 1 2021, the VHFHSZ.
(b) the Director or their designee may review and make fire protection recommendations on applicable construction or development permits or maps provided by the Local Jrisdiction.
(c) the Local Jrisdiction shall ensure that the applicable sections of this Subchapter become a condition of approval of any applicable construction or Development permit or map.

NOTE: Authority cited: Sections 4111 and 4290, Public Resources Code. Reference: Sections 4117 and 4290, Public Resources Code.

§ 1270.05. Local Regulations.

(a) Subchapter 2 shall serve as the minimum Wildfire protection standards applied in SRA and VHFHSZ. However, Subchapter 2 does not supersede local regulations which equal or exceed the standards of this Subchapter.
(b) A local regulation equals or exceeds a minimum standard of this Subchapter only if, at a minimum, the local regulation also fully complies with the corresponding minimum standard in this Subchapter.
(c) A Local Jurisdiction shall not apply exemptions to Subchapter 2 that are not enumerated in Subchapter 2. Exceptions requested and approved in conformance with § 1270.07 (Exceptions to Standards) may be granted on a case-by-case basis.
(d) Notwithstanding a local regulation that equals or exceeds the State Minimum Fire Safe Regulations, Building construction shall comply with the State Minimum Fire Safe Regulations.

NOTE: Authority cited: Sections 4111, 4119 and 4290, Public Resources Code. Reference: Section 4290, Public Resources Code.

§ 1270.06. Inspections.

Inspections shall conform to the following requirements:
(a) Inspections in the SRA shall be made by:
(1) the Director, or
(2) Local Jurisdictions that have assumed state fire protection responsibility on SRA lands, or
(3) Local Jurisdictions where the inspection duties have been formally delegated by the Director to the Local Jurisdictions, pursuant to subsection (b).
(b) The Director may delegate inspection authority to a Local Jurisdiction subject to all of the following criteria:
(1) The Local Jurisdiction represents that they have appropriate resources to perform the delegated inspection authority.

(2) The Local Jurisdiction acknowledges that CAL FIRE's authority under subsection (d) shall not be waived or restricted.
(3) The Local Jurisdiction consents to the delegation of inspection authority.
(4) The Director may revoke the delegation at any time.
(5) The delegation of inspection authority, and any subsequent revocation of the delegation, shall be documented in writing, and retained on file at the CAL FIRE Unit headquarters that administers SRA fire protection in the area.
(c) Inspections in the VHFHSZ shall be made by the Local Jurisdiction.
(d) Nothing in this section abrogates CAL FIRE's authority to inspect and enforce state forest and fire laws in the SRA even when the inspection duties have been delegated pursuant to this section.
(e) Reports of violations within the SRA shall be provided to the CAL FIRE Unit headquarters that administers SRA fire protection in the Local Jurisdiction.
(f) When inspections are conducted, they shall occur prior to: the issuance of the use permit or certificate of Occupancy; the recordation of the parcel map or final map; the filing of a notice of completion; or the final inspection of any project or Building permit.

NOTE: Authority cited: Section 4290, Public Resources Code. Reference: Sections 4290 and 4291, Public Resources Code.

§ 1270.07. Exceptions to Standards.

(a) Upon request by the applicant, an Exception to standards within this Subchapter may be allowed by the Inspection entity in accordance with 14 CCR § 1270.06 (Inspections) where the Exceptions provide the Same Practical Effect as these regulations towards providing Defensible Space. Exceptions granted by the Local Jurisdiction listed in 14 CCR § 1270.06, shall be made on a case-by-case basis only. Exceptions granted by the Local Jurisdiction listed in 14 CCR § 1270.06 shall be forwarded to the appropriate CAL FIRE unit headquarters that administers SRA fire protection in that Local Jurisdiction, or the county in which the Local Jurisdiction is located and shall be retained on file at the Unit Office.
(b) Requests for an Exception shall be made in writing to the Local Jurisdiction listed in 14 CCR § 1270.06 by the applicant or the applicant's authorized representative.
At a minimum, the request shall state the specific section(s) for which an Exception is requested; material facts supporting the contention of the applicant; the details of the Exception proposed; and a map showing the proposed location and siting of the Exception. Local Jurisdictions listed in § 1270.06 (Inspections) may establish additional procedures or requirements for Exception requests.
(c) Where an Exception is not granted by the inspection entity, the applicant may appeal such denial to the Local Jurisdiction. The Local Jurisdiction may establish or utilize an appeal process consistent with existing local building or planning department appeal processes.
(d) Before the Local Jurisdiction makes a determination on an appeal, the inspector shall be consulted and shall provide to that Local Jurisdiction documentation outlining the effects of the requested Exception on Wildfire protection.
(e) If an appeal is granted, the Local Jurisdiction shall make findings that the decision meets the intent of providing Defensible Space consistent with these regulations. Such

findings shall include a statement of reasons for the decision. A written copy of these findings shall be provided to the CAL FIRE Unit headquarters that administers SRA fire protection in that Local Jurisdiction.

NOTE: Authority cited: Section 4290, Public Resources Code. Reference: Sections 4290 and 4291, Public Resources Code.

§ 1270.08. Distance Measurements.

All specified or referenced distances are measured along the ground, unless otherwise stated.

NOTE: Authority cited: Section 4290, Public Resources Code. Reference: Sections 4290 and 4291, Public Resources Code.

Article 2. Ingress and Egress

§ 1273.00. Intent.

Roads, and Driveways, whether public or private, unless exempted under 14 CCR § 1270.03(d), shall provide for safe access for emergency Wildfire equipment and civilian evacuation concurrently, and shall provide unobstructed traffic circulation during a Wildfire emergency consistent with 14 CCR §§ 1273.00 through 1273.09.

NOTE: Authority cited: Section 4290, Public Resources Code. Reference: Sections 4290 and 4291, Public Resources Code.

§ 1273.01. Width.

(a) All roads shall be constructed to provide a minimum of two ten (10) foot traffic lanes, not including shoulder and striping. These traffic lanes shall provide for two-way traffic flow to support emergency vehicle and civilian egress, unless other standards are provided in this article or additional requirements are mandated by Local Jurisdictions or local subdivision requirements. Vertical clearances shall conform to the requirements in California Vehicle Code section 35250.
(b) All One-way Roads shall be constructed to provide a minimum of one twelve (12) foot traffic lane, not including Shoulders. The Local Jurisdiction may approve One-way Roads.
(1) All one-way roads shall, at both ends, connect to a road with two traffic lanes providing for travel in different directions, and shall provide access to an area currently zoned for no more than ten (10) Residential Units.
(2) In no case shall a One-way Road exceed 2,640 feet in length. A turnout shall be placed and constructed at approximately the midpoint of each One-way Road.
(c) All driveways shall be constructed to provide a minimum of one (1) ten (10) foot traffic lane, fourteen (14) feet unobstructed horizontal clearance, and unobstructed vertical clearance of thirteen feet, six inches (13′ 6″).

NOTE: Authority cited: Section 4290, Public Resources Code. Reference: Sections 4290 and 4291, Public Resources Code.

§ 1273.02. Road Surface.

(a) Roads shall be designed and maintained to support the imposed load of Fire Apparatus weighing at least 75,000 pounds, and provide an aggregate base.
(b) Road and Driveway Structures shall be designed and maintained to support at least 40,000 pounds.
(c) Project proponent shall provide engineering specifications to support design, if requested by the Local Jurisdiction.

NOTE: Authority cited: Section 4290, Public Resources Code. Reference: Sections 4290 and 4291, Public Resources Code.

§ 1273.03. Grades.

(a) At no point shall the grade for all Roads and Driveways exceed 16 percent.
(b) The grade may exceed 16%, not to exceed 20%, with approval from the Local Jurisdiction and with mitigations to provide for Same Practical Effect.

NOTE: Authority cited: Section 4290, Public Resources Code. Reference: Sections 4290 and 4291, Public Resources Code.

§ 1273.04. Radius.

(a) No Road or Road Structure shall have a horizontal inside radius of curvature of less than fifty (50) feet. An additional surface width of four (4) feet shall be added to curves of 50-100 feet radius; two (2) feet to those from 100-200 feet.
(b) The length of vertical curves in Roadways, exclusive of gutters, ditches, and drainage structures designed to hold or divert water, shall be not less than one hundred (100) feet.

NOTE: Authority cited: Section 4290, Public Resources Code. Reference: Sections 4290 and 4291, Public Resources Code.

§ 1273.05. Turnarounds.

(a) Turnarounds are required on Driveways and Dead-end Roads.
(b) The minimum turning radius for a turnaround shall be forty (40) feet, not including parking, in accordance with the figures in 14 CCR §§ 1273.05(e) and 1273.05(f). If a hammerhead/T is used instead, the top of the “T” shall be a minimum of sixty (60) feet in length.
(c) Driveways exceeding 150 feet in length, but less than 800 feet in length, shall provide a turnout near the midpoint of the Driveway. Where the driveway exceeds 800 feet, turnouts shall be provided no more than 400 feet apart.
(d) A turnaround shall be provided on Driveways over 300 feet in length and shall be within fifty (50) feet of the building.
(d) Each Dead-end Road shall have a turnaround constructed at its terminus. Where parcels are zoned five (5) acres or larger, turnarounds shall be provided at a maximum of 1,320 foot intervals.
(e) Figure A. Turnarounds on roads with two ten-foot traffic lanes.
(f) Figure B. Turnarounds on driveways with one ten-foot traffic lane.

Figure A/Image 1 is a visual representation of paragraph (b).

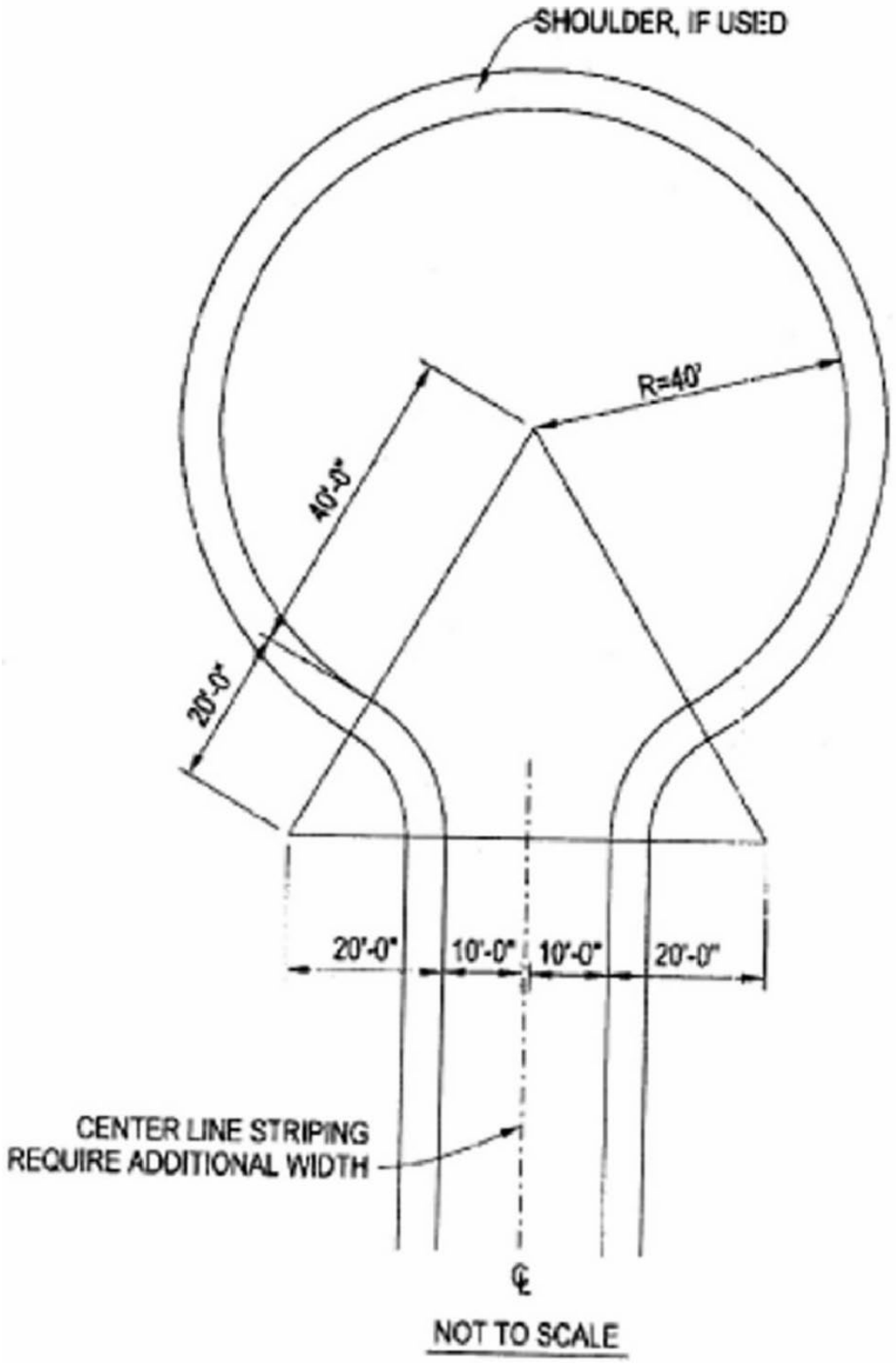

Figure B/Image 2 is a visual representation of paragraph (b).

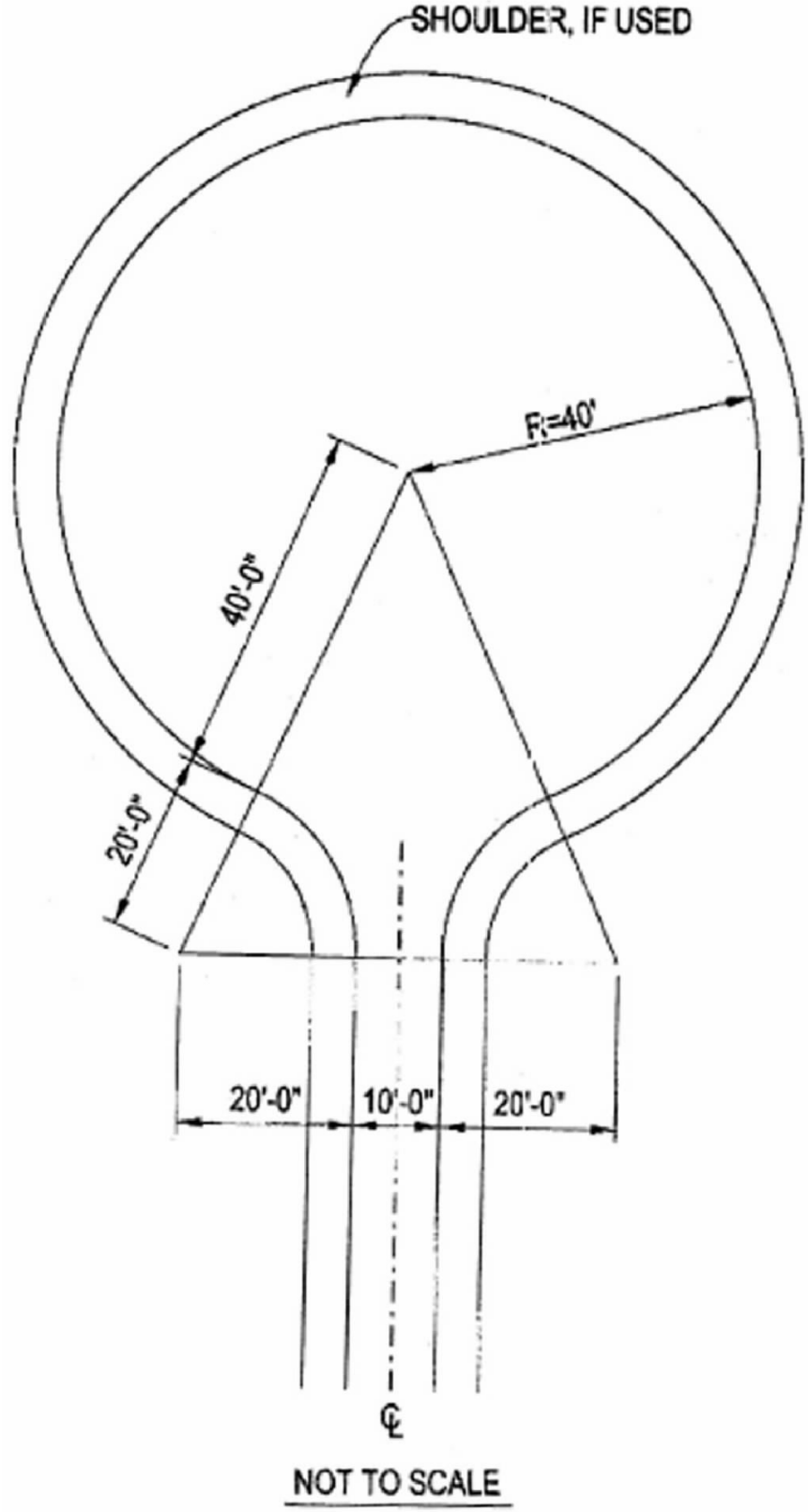

NOTE: Authority cited: Section 4290, Public Resources Code. Reference: Sections 4290 and 4291, Public Resources Code.

§ 1273.06. Turnouts.

Turnouts shall be a minimum of twelve (12) feet wide and thirty (30) feet long with a minimum twenty-five (25) foot taper on each end.

NOTE: Authority cited: Section 4290, Public Resources Code. Reference: Sections 4290 and 4291, Public Resources Code.

§ 1273.07. Road and Driveway Structures.

(a) Appropriate signing, including but not limited to weight or vertical clearance limitations, One-way Road or single traffic lane conditions, shall reflect the capability of each bridge.
(b) Where a bridge or an elevated surface is part of a Fire Apparatus access road, the bridge shall be constructed and maintained in accordance with the American Association of State and Highway Transportation Officials Standard Specifications for Highway Bridges, 17th Edition, published 2002 (known as AASHTO HB-17), hereby incorporated by reference. Bridges and elevated surfaces shall be designed for a live load sufficient to carry the imposed loads of fire apparatus. Vehicle load limits shall be posted at both entrances to bridges when required by the local authority having jurisdiction.
(c) Where elevated surfaces designed for emergency vehicle use are adjacent to surfaces which are not designed for such use, barriers, or signs, or both, as approved by the local authority having jurisdiction, shall be installed and maintained.
(d) A bridge with only one traffic lane may be authorized by the Local Jurisdiction; however, it shall provide for unobstructed visibility from one end to the other and turnouts at both ends.

NOTE: Authority cited: Section 4290, Public Resources Code. Reference: Sections 4290 and 4291, Public Resources Code.

§ 1273.08. Dead-end Roads.

(a) The maximum length of a Dead-end Road, including all Dead-end Roads accessed from that Dead-end Road, shall not exceed the following cumulative lengths, regardless of the number of parcels served:
parcels zoned for less than one acre - 800 feet
parcels zoned for 1 acre to 4.99 acres - 1,320 feet
parcels zoned for 5 acres to 19.99 acres - 2,640 feet
parcels zoned for 20 acres or larger - 5,280 feet
All lengths shall be measured from the edge of the Road surface at the intersection that begins the Road to the end of the Road surface at its farthest point. Where a dead-end road crosses areas of differing zoned parcel sizes requiring different length limits, the shortest allowable length shall apply.
(b) See 14 CCR § 1273.05 for dead-end road turnaround requirements.

NOTE: Authority cited: Section 4290, Public Resources Code. Reference: Sections 4290 and 4291, Public Resources Code.

§ 1273.09. Gate Entrances.

(a) Gate entrances shall be at least two (2) feet wider than the width of the traffic lane(s) serving that gate and a minimum width of fourteen (14) feet unobstructed horizontal clearance and unobstructed vertical clearance of thirteen feet, six inches (13′ 6″).
(b) All gates providing access from a Road to a Driveway shall be located at least thirty (30) feet from the roadway and shall open to allow a vehicle to stop without obstructing traffic on that Road.
(c) Where a One-way Road with a single traffic lane provides access to a gated entrance, a forty (40) foot turning radius shall be used.
(d) Security gates shall not be installed without approval. Where security gates are installed, they shall have an approved means of emergency operation. Approval shall be by the local authority having jurisdiction. The security gates and the emergency operation shall be maintained operational at all times.

NOTE: Authority cited: Section 4290, Public Resources Code. Reference: Sections 4290 and 4291, Public Resources Code.

Article 3. Signing and Building Numbering

§ 1274.00. Intent.

To facilitate locating a fire and to avoid delays in response, all newly constructed or approved Roads and Buildings shall be designated by names or numbers posted on signs clearly visible and legible from the Road. This section shall not restrict the size of letters or numbers appearing on road signs for other purposes.

NOTE: Authority cited: Section 4290, Public Resources Code. Reference: Sections 4290 and 4291, Public Resources Code.

§ 1274.01. Road Signs.

(a) Newly constructed or approved Roads must be identified by a name or number through a consistent system that provides for sequenced or patterned numbering and/or non-duplicative naming within each Local Jurisdiction. This section does not require any entity to rename or renumber existing roads, nor shall a Road providing access only to a single commercial or industrial Occupancy require naming or numbering.
(b) The size of letters, numbers, and symbols for Road signs shall be a minimum four (4) inch letter height, half inch (.5) inch stroke, reflectorized, contrasting with the background color of the sign.

NOTE: Authority cited: Section 4290, Public Resources Code. Reference: Sections 4290 and 4291, Public Resources Code.

§ 1274.02. Road Sign Installation, Location, and Visibility.

(a) Road signs shall be visible and legible from both directions of vehicle travel for a distance of at least one hundred (100) feet.

(b) Signs required by this article identifying intersecting Roads shall be placed at the intersection of those Roads.
(c) A sign identifying traffic access or flow limitations, including but not limited to weight or vertical clearance limitations, dead-end roads, one-way roads, or single lane conditions, shall be placed:
(1) at the intersection preceding the traffic access limitation, and
(2) no more than one hundred (100) feet before such traffic access limitation.
(d) Road signs required by this article shall be posted at the beginning of construction and shall be maintained thereafter.

NOTE: Authority cited: Section 4290, Public Resources Code. Reference: Sections 4290 and 4291, Public Resources Code.

§ 1274.03. Addresses for Buildings.

(a) All Buildings shall be issued an address by the Local Jurisdiction which conforms to that jurisdiction's overall address system. Utility and miscellaneous Group U Buildings are not required to have a separate address; however, each Residential Unit within a Building shall be separately identified.
(b) The size of letters, numbers, and symbols for addresses shall conform to the standards in the California Fire Code, California Code of Regulations title 24, part 9.
(c) Addresses for residential Buildings shall be reflectorized.

NOTE: Authority cited: Section 4290, Public Resources Code. Reference: Sections 4290 and 4291, Public Resources Code.

§ 1274.04. Address Installation, Location, and Visibility.

(a) All buildings shall have a permanently posted address which shall be plainly legible and visible from the Road fronting the property.
(b) Where access is by means of a private Road and the address identification cannot be viewed from the public way, an unobstructed sign or other means shall be used so that the address is visible from the public way.
(c) Address signs along one-way Roads shall be visible from both directions.
(d) Where multiple addresses are required at a single driveway, they shall be mounted on a single sign or post.
(e) Where a Road provides access solely to a single commercial or industrial business, the address sign shall be placed at the nearest Road intersection providing access to that site, or otherwise posted to provide for unobstructed visibility from that intersection.
(f) In all cases, the address shall be posted at the beginning of construction and shall be maintained thereafter.

NOTE: Authority cited: Section 4290, Public Resources Code. Reference: Sections 4290 and 4291, Public Resources Code.

Article 4. Emergency Water Standards

§ 1275.00. Intent.

Emergency water for Wildfire protection shall be available, accessible, and maintained in quantities and locations specified in the statute and these regulations in order to attack a Wildfire or defend property from a Wildfire.

NOTE: Authority cited: Section 4290, Public Resources Code. Reference: Sections 4290 and 4291, Public Resources Code.

§ 1275.01. Application.

The provisions of this article shall apply in the tentative and parcel map process when new parcels are approved by the Local Jurisdiction.

NOTE: Authority cited: Section 4290, Public Resources Code. Reference: Sections 4290 and 4291, Public Resources Code.

§ 1275.02. Water Supply.

(a) When a water supply for structure defense is required to be installed, such protection shall be installed and made serviceable prior to and during the time of construction except when alternative methods of protection are provided and approved by the Local Jurisdiction.
(b) Water systems equaling or exceeding the California Fire Code, California Code of Regulations title 24, part 9, or, where a municipal-type water supply is unavailable, National Fire Protection Association (NFPA) 1142, “Standard on Water Supplies for Suburban and Rural Fire Fighting,” 2017 Edition, hereby incorporated by reference, shall be accepted as meeting the requirements of this article.
(c) Such emergency water may be provided in a fire agency mobile water tender, or naturally occurring or man made containment structure, as long as the specified quantity is immediately available.
(d) Nothing in this article prohibits the combined storage of emergency Wildfire and structural firefighting water supplies unless so prohibited by local ordinance or specified by the local fire agency.
(e) Where freeze or crash protection is required by Local Jurisdictions, such protection measures shall be provided.

NOTE: Authority cited: Section 4290, Public Resources Code. Reference: Sections 4290 and 4291, Public Resources Code.

§ 1275.03. Hydrants.

(a) The Fire Hydrant shall be eighteen (18) inches above the finished surface. Its location in relation to the Road or dRiveway and to the Building(s) or Structure(s) it serves shall comply with California Fire Code, California Code of Regulations title 24, part 9, Chapter 5, and Appendix C.

(b) The Fire Hydrant head shall be a two and half (2 1/2) inch National Hose male thread with cap for pressure and gravity flow systems and four and a half (4 1/2) inch for draft systems.
(c) Fire Hydrants shall be wet or dry barrel and have suitable freeze or crash protection as required by the Local Jurisdiction.

NOTE: Authority cited: Section 4290, Public Resources Code. Reference: Sections 4290 and 4291, Public Resources Code.

§ 1275.04. Signing of Water Sources.

(a) Each Fire Hydrant or access to water shall be identified as follows:
(1) if located along a Driveway, a reflectorized blue marker, with a minimum dimension of three (3) inches shall be located on the Driveway address sign and mounted on a fire retardant post, or
(2) if located along a Road,
(1) a reflectorized blue marker, with a minimum dimension of three (3) inches, shall be mounted on a fire retardant post. The sign post shall be within three (3) feet of said Fire Hydrant with the sign no less than three (3) feet nor greater than five (5) feet above ground, in a horizontal position and visible from the Driveway, or
(2) as specified in the State Fire Marshal's Guidelines for Fire Hydrant Markings Along State Highways and Freeways, May 1988.

NOTE: Authority cited: Section 4290, Public Resources Code. Reference: Sections 4290 and 4291, Public Resources Code.

Article 5. Building Siting, Setbacks, and Fuel Modification

§ 1276.00. Intent.

To reduce the intensity of a Wildfire, reducing the volume and density of flammable vegetation around Development through strategic fuel modification, parcel siting and Building setbacks, and the protection of Undeveloped Ridgelines shall provide for increased safety for emergency fire equipment, including evacuating civilians, and a point of attack or defense from a Wildfire.

NOTE: Authority cited: Section 4290, Public Resources Code. Reference: Sections 4290 and 4291, Public Resources Code.

§ 1276.01. Building and Parcel Siting and Setbacks.

(a) All parcels shall provide a minimum thirty (30) foot setback for all Buildings from all property lines and/or the center of a Road, except as provided for in subsection (b).
(b) A reduction in the minimum setback shall be based upon practical reasons, which may include but are not limited to, parcel dimensions or size, topographic limitations, Development density requirements or other Development patterns that promote low-carbon emission outcomes; sensitive habitat; or other site constraints , and shall provide for an alternative method to reduce Structure-to-Structure ignition by incorporating features such as, but not limited to:

(1) non-combustible block walls or fences; or
(2) non-combustible material extending five (5) feet horizontally from the furthest extent of the Building; or
(3) hardscape landscaping; or
(4) a reduction of exposed windows on the side of the Structure with a less than thirty (30) foot setback; or
(5) the most protective requirements in the California Building Code, California Code of Regulations Title 24, Part 2, Chapter 7A, as required by the Local Jurisdiction.

NOTE: Authority cited: Section 4290, Public Resources Code. Reference: Sections 4290 and 4291, Public Resources Code.

§ 1276.02. Ridgelines.

(a) The Local Jurisdiction shall identify Strategic Ridgelines, if any, to reduce fire risk and improve fire protection through an assessment of the following factors:
(1) Topography;
(2) Vegetation;
(3) Proximity to any existing or proposed residential, commercial, or industrial land uses;
(4) Construction where mass grading may significantly alter the topography resulting in the elimination of Ridgeline fire risks;
(5) Ability to support effective fire suppression; and
(6) Other factors, if any, deemed relevant by the Local Jurisdiction.
(b) Preservation of Undeveloped Ridgelines identified as strategically important shall be required pursuant to this section.
(c) New Buildings on Undeveloped Ridgelines identified as strategically important are prohibited, as described in subsections (c)(1), (c)(2), and (c)(3).
(1) New Residential Units are prohibited within or at the top of drainages or other topographic features common to Ridgelines that act as chimneys to funnel convective heat from Wildfires.
(2) Nothing in this subsection shall be construed to alter the extent to which utility infrastructure, including but not limited to wireless telecommunications facilities, as defined in Government Code section 65850.6, subdivision (d)(2), or Storage Group S or Utility and Miscellaneous Group U Structures, may be constructed on Undeveloped Ridgelines.
(3) Local Jurisdictions may approve Buildings on Strategic Ridgelines where Development activities such as mass grading will significantly alter the topography that results in the elimination of Ridgeline fire risks.
(d) The Local Jurisdiction may implement further specific requirements to preserve Undeveloped Ridgelines.

NOTE: Authority cited: Section 4290, Public Resources Code. Reference: Sections 4290 and 4291, Public Resources Code.

§ 1276.03. Fuel Breaks.

(a) When Building construction meets the following criteria, the Local Jurisdiction shall determine the need and location for Fuel Breaks in consultation with the Fire Authority:

(1) the permitting or approval of three (3) or more new parcels, excluding lot line adjustments as specified in Government Code (GC) section 66412(d); or
(2) an application for a change of zoning increasing zoning intensity or density; or
(3) an application for a change in use permit increasing use intensity or density.
(b) Fuel Breaks required by the Local Jurisdiction, in consultation with the Fire Authority, shall be located, designed, and maintained in a condition that reduces the potential of damaging radiant and convective heat or ember exposure to Access routes, Buildings, or infrastructure within the Development.
(c) Fuel Breaks shall have, at a minimum, one point of entry for fire fighters and any Fire Apparatus. The specific number of entry points and entry requirements shall be determined by the Local Jurisdiction, in consultation with the Fire Authority.
(d) Fuel Breaks may be required at locations such as, but not limited to:
(1) Directly adjacent to defensible space as defined by 14 CCR § 1299.02 to reduce radiant and convective heat exposure, ember impacts, or support fire suppression tactics;
(2) Directly adjacent to Roads to manage radiant and convective heat exposure or ember impacts, increase evacuation safety, or support fire suppression tactics;
(3) Directly adjacent to a Hazardous Land Use to limit the spread of fire from such uses, reduce radiant and convective heat exposure, or support fire suppression tactics;
(4) Strategically located along Ridgelines, in Greenbelts, or other locations to reduce radiant and convective heat exposure, ember impacts, or support community level fire suppression tactics.
(e) Fuel Breaks shall be completed prior to the commencement of any permitted construction.
(f) Fuel Breaks shall be constructed using the most ecologically and site appropriate treatment option, such as, but not limited to, prescribed burning, manual treatment, mechanical treatment, prescribed herbivory, and targeted ground application of herbicides.
(g) Where a Local Jurisdiction requires Fuel Breaks, maintenance mechanisms shall be established to ensure the fire behavior objectives and thresholds are maintained over time.
(h) The mechanisms required shall be binding upon the property for which the Fuel Break is established, shall ensure adequate maintenance levels, and may include written legal agreements; permanent fees, taxes, or assessments; assessments through a homeowners' association; or other funding mechanisms.

NOTE: Authority cited: Section 4290, Public Resources Code. Reference: Sections 4290 and 4291, Public Resources Code.

§ 1276.04. Greenbelts, Greenways, Open Spaces and Parks.

(a) Where a Greenbelt, Greenway, open space, park, landscaped or natural area, or portions thereof, is intended to serve as a Fuel Break, the space or relevant portion thereof shall conform with the requirements in § 1276.03 (Fuel Breaks).

NOTE: Authority cited: Section 4290, Public Resources Code. Reference: Sections 4290 and 4291, Public Resources Code.

§ 1276.05. Disposal of Flammable Vegetation and Fuels.

The disposal, including burning or removal to a site approved by the Local Jurisdiction, in consultation with the Fire Authority, of flammable vegetation and fuels caused by site construction, Road, and Driveway construction shall be in accordance with all applicable laws and regulations.

NOTE: Authority cited: Section 4290, Public Resources Code. Reference: Sections 4290 and 4291, Public Resources Code.

Mendocino County

Legislation Text

File #: 17-0179, **Version:** 1

To: Board of Supervisor s Public Health, Safety, and Resources Committee

From: Planning and Building Services

Meeting Date: March 13, 2017

Department Contact:	Steve Dunnicliff	**Phone:**	234-6650
CEO Resource/ Contact:	Kenneth Spain	**Phone:**	463-4441

Time Allocated for Item: 30 mins

Agenda Title:
Presentation, Discussion, and Possible Direction to Staff Regarding Mendocino County Code Governing Limited Density Rural Dwellings Commonly Referred to as the "Class K" Ordinance

Recommendation:
Receive the presentation from staff and provide further direction.

Previous Board/Board Committee Actions:
Ordinance No. 3343 was adopted by the Board of Supervisors in 1981, establishing Chapter 18.23 of the Mendocino County Code, Regulations for Limited Density Rural Dwelling, commonly known as the Class K Ordinance. On January 24, 2017, the Board of Supervisors referred this matter to committee for review.

Summary of Referral:
Mendocino County's Class K Ordinance was adopted in 1981, making it 36 years old. The codes used for the ordinance are the 1976 Uniform Building Code, 1976 Uniform Mechanical Code, 1976 Uniform Plumbing Code and the National Electric Code. These codes are antiquated, and the Ordinance does not provide authority to the County to require fire resistant structures in a wild land fire environment or energy compliance.

The current ordinance includes many statements which are difficult to define, difficult to consistently implement, and that require extensive personal judgment. Examples include: "reasonable judgment of conformance", "based upon the general description and simplified plans", "It shall be the purpose and intent of this Chapter to permit the use of ingenuity and preferences of the builder, and to allow and facilitate the use of alternatives to the specifications prescribed by the uniform technical codes to the extent that a reasonable degree of health and safety is provided by such alternatives, and that the materials, methods of construction, and structural integrity of the structure shall perform in application for the purpose intended.

Additionally, there is not clarity on the type, amount, and size of structures allowed under this ordinance as it is currently adopted. The primary guiding language is contained within the "intent and application" section of the code. However, that section's use of the phrase "limited density rural dwellings and appurtenant structures" would be easier to interpret if the word "appurtenant" was replaced with "accessory".

Finally, the code as written includes a definition for "detached bedroom" which is inconsistent with the

definition for “detached bedroom” within the County’s zoning code.

The Building Codes are the “minimum” requirement when constructing a building and the Class K Ordinance is in need of revision.

Supplemental Information Available Online at: www.co.mendocino.ca.us/planning

Fiscal Impact:

Source of Funding: N/A
Budgeted in Current F/Y: N/A
Current F/Y Cost: N/A
Annual Recurring Cost: N/A

Supervisorial District: All

CEO Liaison: Kenneth Spain, Administrative Analyst
CEO Review: Yes
Comments:

ADMINISTRATIVE POLICY #1

Subject: Foundations completed without inspections

When approved by the Building Official this bulletin is to be used as a minimum guideline for obtaining inspection compliance on Title 24 projects in which a foundation has been constructed without receiving inspection approvals by this department.

Guidelines:

The owner, owner's agent or contractor shall employ a California licensed engineer or architect to conduct a site investigation on the foundation. The investigation report shall include but is not limited to the following:

1) Name(s) of person(s) making inspections.
2) Date and times of inspections.
3) A report of conditions found at the site.
4) Foundation depths, widths and lengths.
5) Rebar size, locations and spacing.
6) Anchor bolt size, length and spacing.

The report must include a statement that the work has been found to be consistent with the approved plans and current building code requirements. It shall be submitted to the Building Official in writing and wet stamped and signed by the engineer or architect.

The report must be reviewed by the Building Official and approved prior to the resumption of work on the project.

Additional data may be required at the time of review by the Building Official.

This policy is derived from Section 104 of the California Building Code which authorizes the Building Official to render interpretations of the code and adopt policies and procedures to clarify the application of its provisions.

Dated: January 25, 1991 Revised: May 14, 2015

Mendocino County Planning and Building Services
Building Inspection Division

Chris Warrick
Building Official

Steve Dunnicliff
Director

BUILDING POLICY 03

Subject: Foundations completed without inspections

When approved by the Building Official this bulletin is to be used as a minimum guideline for obtaining inspection compliance on Title 24 projects in which a foundation has been constructed without receiving inspection approvals by this department.

Guidelines:

The owner, owner's agent or contractor shall employ a California licensed engineer or architect to conduct a site investigation on the foundation. The investigation report shall include but is not limited to the following:

1) Name(s) of person(s) making inspections.
2) Date and times of inspections.
3) A report of conditions found at the site.
4) Foundation depths, widths and lengths.
5) Rebar size, locations and spacing.
6) Anchor bolt size, length and spacing.

The report must include a statement that the work has been found to be consistent with the approved plans and current building code requirements. It shall be submitted to the Building Official in writing and wet stamped and signed by the engineer or architect.

The report must be reviewed by the Building Official and approved prior to the resumption of work on the project.

Additional data may be required at the time of review by the Building Official.

This policy is derived from Section 104 of the California Building Code which authorizes the Building Official to render interpretations of the code and adopt policies and procedures to clarify the application of its provisions.

Dated: January 25, 1991 Revised: May 14, 2015

Mendocino County Planning and Building Services_
Building Inspection Division

Chris Warrick
Building Official

Steve Dunnicliff
Director

Building Policy 08

Subject: Chapter 18.23 -Regulations for Limited Density Rural Dwellings: Section: 18.23.250

Definition of a half story:

Any story with a headroom clearance of less than seven (7) feet for its entire area measured from it's floor level to the bottom of the sheetrock or roof sheathing or bottom of ceiling joist, rafters or beams spaced at twenty-four (24) inches or less (whichever is the closer) and will be used for storage only and not used for any other purpose such as, but not limited to, habitable space, bathroom, kitchen, hall or toilet compartment. The story cannot open directly into a habitable space, bathroom, kitchen, hall or toilet compartment by a doorway or fixed stairway. The area may open directly to the above spaces by a hatch, attic access pull down ladder or unfixed ladder.

Dated: January 24, 2007 Reaffirmed

Mendocino County Planning& Building Services
Building Division

Chris Warrick
Building Official

Exhibit 7

Building Policy 08

Subject: Chapter 18.23 -Regulations for Limited Density Rural Dwellings: Section: 18.23.250

Definition of a half story:

Any story with a headroom clearance of less than seven (7) feet for its entire area measured from it's floor level to the bottom of the sheetrock or roof sheathing or bottom of ceiling joist, rafters or beams spaced at twenty-four (24) inches or less (whichever is the closer) and will be used for storage only and not used for any other purpose such as, but not limited to, habitable space, bathroom, kitchen, hall or toilet compartment. The story cannot open directly into a habitable space, bathroom, kitchen, hall or toilet compartment by a doorway or fixed stairway. The area may open directly to the above spaces by a hatch, attic access pull down ladder or unfixed ladder.

Dated: January 24, 2007 Reaffirmed

Mendocino County Planning& Building Services
Building Division

Chris Warrick
Building Official

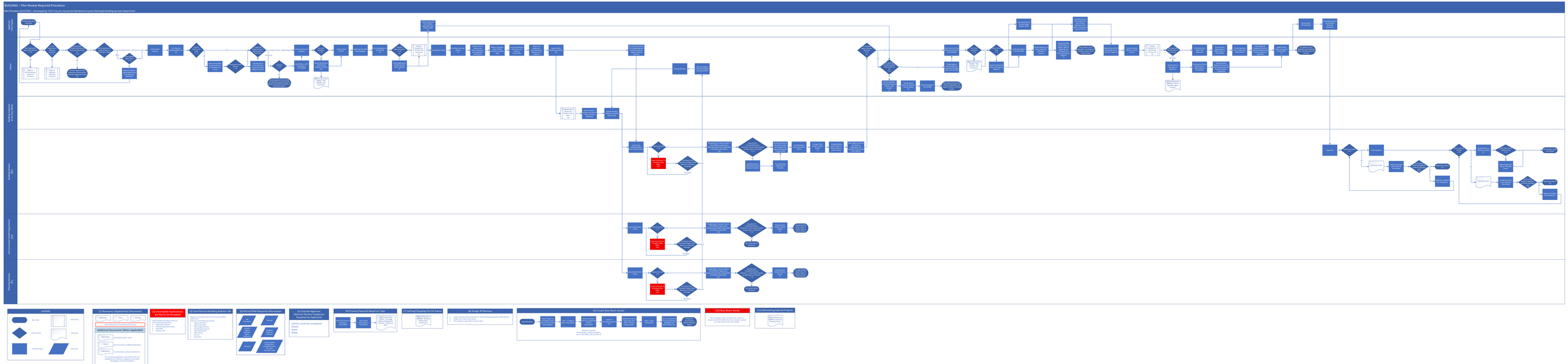
BUILDING – Plan Review Required Procedure
New Procedure 8/22/2025 – Developed by Trish Tracy for Use by the Mendocino County Planning & Building Services Department
Applicant (The Public)
Admin
Building Inspector (Bldg Inspector)
Building Division (BD)
Environmental Health Department (EH)
Planning Division (PD)
LEGEND
(1) Necessary Application Documents
(2) Incomplete Applications are Not to be Accepted
(3) Find Physical Building Address File
(4) Permit/TRAK Required Information
(5) Outside Agencies Optional Review Categories (Supplied by Applicant)
(6) Process Payment Based on Type
(7) Setting/Changing Permit Status
(8) Assign All Reviews
(9) Create Blue Beam Studio
(10) Blue Beam Notify
(11) Reinstating Expired Projects

Exhibit 8

COUNTY OF MENDOCINO
DEPARTMENT OF PLANNING AND BUILDING SERVICES
860 NORTH BUSH STREET · UKIAH · CALIFORNIA · 95482
752 SOUTH FRANKLIN STREET · FT. BRAGG · CALIFORNIA · 95437

JULIA KROG, DIRECTOR
PHONE: 707-234-6650
FAX: 707-463-5709
FB PHONE: 707-964-5379
FB FAX: 707-961-2427
pbs@mendocinocounty.gov
www.mendocinocounty.gov/pbs

BUILDING DIVISION POLICY #18 PROCEDURE FOR Permitting a Residential Structure Built Without a Permit

PREVIOUS POLICY

Administrative Bulletin #1

PURPOSE

The purpose of this policy is to outline a procedure for the legalization of an existing residential structure under the code cycle that was in effect at the time it was constructed.

APPLICABILITY

Detached one- and two-family dwellings and appurtenant structures.

OBJECTIVES

The objectives of this policy are to:

- Standardize the procedure to allow the permitting and legalization of residential structures built without a permit and provide a list of the required documentation to be submitted with the permit application.

AUTHORITY

The authority for this procedure is contained in the Mendocino County Code ("MCC") Title 18 – *Building Regulations* Chapter 18.04.025 – *California Codes Adopted*, and the California Building Code ("CBC") Section [A] 104.

Senate Bill No. 1226 Chapter 1010

Health and Safety Code section 17958.12

PROCEDURE

1. Provide a site plan, floor plan(s) and exterior elevations of the structure. All drawings but be drawn to a standard architectural or engineering scale.

2. Provide a stamped signed letter by a California licensed Architect or Engineer, the letter shall include a determination as to what year the structure was built and what specific materials / construction methods that were used to determine the year built. It shall also include the code cycle that was in effect at the time of construction and whether the structure is in compliance with that code cycle or list the deficiencies and proposed corrections to meet the code cycle that was in effect. Once the permit is issued, corrections shall be made and inspected by Mendocino County and certified by the design professional that has prepared the letter.

3. ELECTRICAL SYSTEMS: Provide a letter from a California licensed electrician including license # and signature. The letter shall document that the structure was inspected and tested and is in compliance with the code that was in effect at the time it was constructed or list the corrections required to comply. Once the permit is issued, corrections shall be made and inspected by Mendocino County and certified by the electrician that has prepared the letter.

4. PLUMBING SYSTEMS: Provide a letter from a California licensed plumber including license # and signature, the letter shall document that the structure was inspected and tested and is in compliance with the code that was in effect at the time it was constructed or list the corrections required to comply. Once the permit is issued, corrections shall be made and inspected by Mendocino County and certified by the plumber that has prepared the letter.

5. MECHANICAL SYSTEMS: Provide a letter from a California licensed mechanical contractor including license # and signature, the letter shall document that the structure was inspected and tested and is in compliance with the code that was in effect at the time it was constructed or list the corrections required to comply. Once the permit is issued corrections shall be made and inspected by Mendocino County and certified by the mechanical contractor that has prepared the letter.

6. Fire and Smoke alarms shall be installed to meet current code requirements for locations. There are no exceptions.

7. Even with approval letters noted elsewhere in this Policy, it may be necessary to remove finishes to expose items for verification. The building inspector conducting the inspection will make determinations in the field as to items that will need to be exposed.

This policy is effective as of the date of the signatures below.

Policy Approved:__ _____ Date: __2/6/2026_____
Richard Angley, Chief Building Official

Policy Approved: _____ Date: __2/5/2026_____
Julia Krog, Director Planning and Building Services

COUNTY OF MENDOCINO
DEPARTMENT OF PLANNING AND BUILDING SERVICES
860 NORTH BUSH STREET · UKIAH · CALIFORNIA · 95482
752 SOUTH FRANKLIN STREET · FT. BRAGG · CALIFORNIA · 95437

JULIA KROG, DIRECTOR
PHONE: 707-234-6650
FAX: 707-463-5709
FB PHONE: 707-964-5379
FB FAX: 707-961-2427
pbs@mendocinocounty.gov
www.mendocinocounty.gov/pbs

BUILDING DIVISION POLICY #19

PROCEDURE FOR Permitting a Non-Residential Structure Built Without a Permit

PREVIOUS POLICY

Administrative Bulletin #1

PURPOSE

The purpose of this policy is to outline a procedure for the legalization of an existing non-residential structure built without a building permit.

APPLICABILITY

Non-Residential Structures, remodels and additions.

OBJECTIVES

The objectives of this policy are to:

- Standardize the procedure to allow the permitting and legalization of non-residential structures built without a permit and provide a list of the required documentation to be submitted with the permit application.

AUTHORITY

The authority for this procedure is contained in the Mendocino County Code ("MCC") Title 18 – *Building Regulations* Chapter 18.04.025 – *California Codes Adopted*, and the California Building Code ("CBC") Section [A] 104.

PROCEDURE

1. Provide a complete set of plans including (but not limited to) site plan, floor plan(s), exterior elevations, foundation plan, framing plan(s), electrical plan(s), plumbing plan(s), mechanical plan(s) construction details, energy compliance documentation and geotechnical report (if applicable). Structure shall meet the current adopted California Building Code cycle at the time of permit application submission. All drawings shall be drawn to a standard architectural or engineering scale and stamped by a California licensed design professional (architect or engineer).

2. ELECTRICAL SYSTEMS: Provide a letter from a California licensed electrician including license # and signature. The letter shall document that the system was inspected and tested and is in compliance with the current adopted California Building Code cycle that is in effect at the time of permit application submission. If corrections are required, the letter shall list the corrections required to comply with building code standards. Once the permit is issued, corrections shall be made and certified by the electrician that has prepared the letter and inspected by Mendocino County Building Division.

3. PLUMBING SYSTEMS: Provide a letter from a California licensed Plumber including license # and signature. The letter shall document that the system was inspected and tested and is in compliance with the current adopted California Building Code cycle that is in effect at the time of permit application submission. If corrections are required, the letter shall list the corrections required to comply with building code standards. Once the permit is issued, corrections shall be made and certified by the plumbing contractor that has prepared the letter and inspected by Mendocino County Building Division.

4. MECHANICAL SYSTEMS: Provide a letter from a California licensed mechanical contractor including license # and signature. The letter shall document that the system was inspected and tested and is in compliance with the current adopted California Building Code cycle that is in effect at the time of permit application submission. If corrections are required, the letter shall list the corrections required to comply with building code standards. Once the permit is issued, corrections shall be made and certified by the mechanical contractor that has prepared the letter and inspected by Mendocino County Building Division.

5. Note: Even with approval letters noted elsewhere in this Policy, it may be necessary to remove finishes to expose items for verification. The building inspector conducting the inspection will make determinations in the field as to items that will need to be exposed.

This policy is effective as of the date of the signatures below.

Policy Approved: _____ Date: _2/6/2026_____
Richard Angley, Chief Building Official

Policy Approved: _____ Date: __2/5/2026_____
Julia Krog, Director Planning and Building Services

Exhibit 10

Description	PRC 4290/Title 14	Other	Replaces / superseds
This policy ensures grading and soil-related construction activities are conducted in a manner that protects public safety, structural integrity, environmental stability, and long-term land performance.	No	N/A	BB 01 BB 14 BM 03 March 13, 2026 updated policies
These requirements ensure public safety through proper inspection, sequencing of utility connections, and structural completion.	NO	NA	BB 04, BP 17, BP 28, BP 34
The purpose of this policy is to establish consistent procedure governing construction-phase inspections, field operations, inspection consolidation, corrective inspections, and enforcement actions.	NO	NA	BP 03, BP 13, BP 30
This policy ensures roofing and related structural work is performed in compliance with applicable building and fire codes while maintaining safe means of egress for occupants.	NO	NA	BP 09, BP 23
This policy is intended to support efficiency, transparency, and accuracy throughout the permit application and issuance process.	NO	NA	BP 24, BP 44, BPR 01
This policy ensures clarity, accountability, and code compliance throughout the plan review and construction process.	NO	NA	BM 06, BP 10, BP 25
This policy supports transparency for applicants and ensures uniform implementation across permit tracking systems, staff workflows, and public-facing portals.	NO	**Awaiting Outside Agency:** Outside Agency review is still needed; to be provided by the applicant. Applicant action required.	BM 04, BM, 12, BP 04

Description	PRC 4290/Title 14	Other	Replaces / superseds
This policy is intended to reduce confusion for applicants, improve staff consistency, and ensure lawful permitting of manufactured and mobile home projects.	NO	NA	BM 07
The purpose of this policy is to establish uniform requirements for the permit submittal, plan review, and inspection of solar energy systems regulated by the Building Division.	NO	NA	BPR 02
This policy is intended to support public safety, regulatory compliance, and efficient recovery following disaster events.	NO	NA	BM 13, BP 26
The purpose of this policy is to outline a procedure for the legalization of an existing residential structure under the code cycle that was in effect at the time it was constructed.	NO	legalization of residential structures built without a permit. Fall under the **Class K** permitting.	AB 01 NOTE: AB 01 was originally written for illegal foundations. This policy does not mention illegal foundations.
The purpose of this policy is to outline a procedure for the legalization of an existing non-residential structure built without a building permit.	NO	legalization of residential structures built without a permit. Fall under the **Class K** permitting.	AB 01 NOTE: AB 01 was originally written for illegal foundations. This policy does not mention illegal foundations.

Exhibit 11

COUNTY OF MENDOCINO
DEPARTMENT OF PLANNING AND BUILDING SERVICES
860 NORTH BUSH STREET · UKIAH · CALIFORNIA · 95482
120 WEST FIR STREET · FORT BRAGG · CALIFORNIA · 95437

JULIA KROG, DIRECTOR
PHONE: 707-234-6650
FAX: 707-463-5709
FB PHONE: 707-964-5379
FB FAX: 707-961-2427
pbs@mendocinocounty.org
www.mendocinocounty.org/pbs

To: Building Inspectors

From: Richard Angley, Chief Building Official

Subject: **Building Inspector Performance Expectations**

1. Always conduct yourself in a professional manner, be impartial and avoid bias during all inspections, counter inquiries, plan reviews and interactions with fellow staff.
2. Be open to communication amongst all staff and departments. Effectively communicate policy, procedure, ordinance, and code requirements through written and verbal communication to the responsible party and fellow inspectors.
3. Adhere to the establish timeline, strategy and desired outcome for each objective that is assigned to you. When unsure, consult your supervisor for guidance on how to move projects forward, be prepared with research and possible solutions / path(s) forward to achieve the desired result.
4. Obtain all certifications required for you current position in the allotted time as well as maintain all certifications by obtaining all required continuing education units and submitting to International Code Council.
5. Be responsible for your objectives and monitor your tasks independently, prioritize your workload as it pertains to field, office work and education.
6. Keep accurate records of all inspections, plan reviews and communications, when appropriate attach documentation in TRAKit or add appropriate notes to TRAKit.
7. If you are assigned special duties or are responsible for a particular program, stay informed of current trends and activity. Pay special attention to record keeping deadlines for your duties and training requirements.
8. Respond to all phone calls and emails in a timely manner, provide any required follow up information as soon as possible and if there will be a delay in the response advise the recipient of the extended ETA.
9. Be punctual in all that you do. Conduct follow-ups in a timely manner. Set timelines for yourself and also follow timelines set by your supervisor. If the current timeline is not able to be achieved discuss with your supervisor ASAP, be prepared with a new proposed timeline and solutions to insure it is achievable.
10. Keep your supervisor apprised of progress on projects and complex situations as they arise. Actively participate in monthly all staff meetings, inspector meetings, and one-on-one meetings with your supervisor by providing relevant input, feedback, observations, and solutions.
11. Read, understand and follow all formalized policies and procedures adopted by the Division, Department and County. This includes adherence to local and state code requirements
12. Follow all instructions and directives of your direct Supervisor that do not violate any subsequent polices, ordinances or laws. Always follow your chain of command regarding questions, concerns, comments, and process improvements, and be avoidant of seeking out alternative answers to that of your direct supervisor through another supervisor, or the manager. If there is a concern regarding the instructions, or conflicting instruction, please refer to the County Employee Handbook for the appropriate pathway to resolution.

Issued by: _____ Date: _____

Richard Angley, Chief Building Official

Received by: _____(Signature) Date: _____

_____ (Print name)